Lexium 28E and BCH2 Servo Drive System

User Guide

(Original Document)

10/2018

EtherCAT®

EIO0000002454.00

www.schneider-electric.com

Schneider Electric

The information provided in this documentation contains general descriptions and/or technical characteristics of the performance of the products contained herein. This documentation is not intended as a substitute for and is not to be used for determining suitability or reliability of these products for specific user applications. It is the duty of any such user or integrator to perform the appropriate and complete risk analysis, evaluation and testing of the products with respect to the relevant specific application or use thereof. Neither Schneider Electric nor any of its affiliates or subsidiaries shall be responsible or liable for misuse of the information contained herein. If you have any suggestions for improvements or amendments or have found errors in this publication, please notify us.

You agree not to reproduce, other than for your own personal, noncommercial use, all or part of this document on any medium whatsoever without permission of Schneider Electric, given in writing. You also agree not to establish any hypertext links to this document or its content. Schneider Electric does not grant any right or license for the personal and noncommercial use of the document or its content, except for a non-exclusive license to consult it on an "as is" basis, at your own risk. All other rights are reserved.

All pertinent state, regional, and local safety regulations must be observed when installing and using this product. For reasons of safety and to help ensure compliance with documented system data, only the manufacturer should perform repairs to components.

When devices are used for applications with technical safety requirements, the relevant instructions must be followed.

Failure to use Schneider Electric software or approved software with our hardware products may result in injury, harm, or improper operating results.

Failure to observe this information can result in injury or equipment damage.

© 2018 Schneider Electric. All rights reserved.

Table of Contents

Safety Information . . . 9
About the Book . . . 11
Part I Servo Drive System Planning . . . 17
Chapter 1 General Overview . . . 19
Servo Drive Device Overview . . . 20
Drive / Motor References . . . 22
Chapter 2 Document Navigator . . . 25
Document Navigator . . . 25
Part II Servo Drive System Technical Data . . . 27
Chapter 3 Certifications . . . 29
Conditions for UL 508C . . . 30
Conditions for CSA . . . 31
Chapter 4 Drive . . . 33
4.1 General Overview . . . 34
Servo Drive Description . . . 35
Servo Drive Nameplate . . . 36
Servo Drive Type Code . . . 37
4.2 Drive Technical Data . . . 38
Environmental Conditions . . . 39
Dimensions . . . 41
Electrical Data . . . 43
Single-Phase Connection . . . 45
Three-Phase Connection . . . 47
Inputs / Outputs Characteristics . . . 49
Chapter 5 Motor . . . 51
5.1 General Overview . . . 52
Components and Interfaces . . . 53
Servo Motor Nameplate . . . 54
Servo Motor Type Code . . . 56
5.2 Motor Technical Data . . . 57
Environmental Conditions . . . 58
Tightening Torque and Property Class of Screws . . . 59
Overload Characteristics Curves . . . 59
Encoder Technical Data . . . 60
5.3 BCH2MB Motor . . . 61
BCH2MB Dimensions . . . 62
BCH2MB Characteristics Table . . . 63
BCH2MB Curves . . . 64
5.4 BCH2LD Motor . . . 65
BCH2LD Dimensions . . . 66
BCH2LD Characteristics Table . . . 67
BCH2LD Curves . . . 68
5.5 BCH2•F Motor . . . 69
BCH2•F Dimensions . . . 70
BCH2•F Characteristics Table . . . 71
BCH2•F Curves . . . 72
5.6 BCH2LH Motor . . . 73
BCH2LH Dimensions . . . 74
BCH2LH Characteristics Table . . . 75
BCH2LH Curves . . . 76

5.7 BCH2•M Motor . . . 77
BCH2•M Dimensions . . . 78
BCH2•M Characteristics Table . . . 79
BCH2•M Curves . . . 81
5.8 BCH2•R Motor . . . 83
BCH2•R Dimensions . . . 84
BCH2•R Characteristics Table . . . 85
BCH2•R Curves . . . 87
Chapter 6 Accessories and Spare Parts . . . 89
Commissioning Tools . . . 90
Connectors and Adapters . . . 90
External Mains Filters . . . 90
DC Bus Accessories . . . 91
Application Nameplate . . . 91
Ethernet Shielded Twisted-pair Cables . . . 92
Motor Cables . . . 93
Encoder Cables and Accessories . . . 93
Signal Cables . . . 93
Signal Cable for Safety Function STO . . . 94
External Braking Resistors and Holding Brake Controller . . . 94
Circuit Breakers . . . 94
Motor Protection Switches and Power Contactors . . . 95
Part III Engineering . . . 97
Chapter 7 Engineering . . . 99
7.1 Electromagnetic Compatibility (EMC) . . . 100
Electromagnetic Compatibility (EMC) . . . 101
External Mains Filters . . . 103
7.2 Cables . . . 104
Cables . . . 104
7.3 Residual Current Device . . . 106
Residual Current Device . . . 106
7.4 Common DC Bus . . . 107
Common DC Bus . . . 107
7.5 Safety Function STO (“Safe Torque Off”) . . . 108
Process Minimizing Risks Associated with the Machine . . . 109
Functional Safety . . . 110
Definitions . . . 113
Function . . . 114
Requirements for Using the Safety Function . . . 115
Application Examples STO . . . 118
7.6 Rating the Braking Resistor . . . 120
Rating the Braking Resistor . . . 121
Internal Braking Resistor . . . 122
External Braking Resistors . . . 123
7.7 Monitoring Functions . . . 124
Monitoring Functions . . . 124
7.8 Configurable Inputs and Outputs . . . 125
Configurable Inputs and Outputs . . . 125
7.9 Wiring . . . 126
General Wiring . . . 126
Part IV Installation . . . 127
Chapter 8 Before Mounting . . . 129
Inspecting the Product . . . 130
Scope of Supply . . . 131

Chapter 9 Drive Installation . . . 133
Mechanical Installation Drive . . . 134
Electrical Installation Drive . . . 136
Connection Grounding Screw . . . 138
Connection I/O Interface (CN1) . . . 139
Connecting the Motor Encoder (CN2) . . . 146
Connection PC (CN3) . . . 148
Connection Fieldbus (CN4) . . . 150
Connection Logic Supply and Power Stage Supply (CN5) . . . 152
Connection DC Bus (CN6) . . . 155
Connection Braking Resistor (CN7) . . . 156
Connecting the Motor Phases (CN8) . . . 158
Holding Brake Connection . . . 161
Connection STO (CN9) . . . 162
Chapter 10 Motor Installation . . . 165
Mechanical Installation Motor . . . 166
Connections and Pin Assignments . . . 169
Connection of Motor and Encoder . . . 172
Holding Brake Connection . . . 174
Chapter 11 Verifying Installation . . . 175
Verifying Installation . . . 175
Part V Commissioning . . . 177
Chapter 12 Overview . . . 179
General . . . 180
Commissioning Tools . . . 182
Chapter 13 Integrated HMI . . . 183
Overview . . . 184
Integrated HMI Structure . . . 185
7-Segment Display . . . 186
Status Information Via the HMI . . . 188
Chapter 14 Commissioning Procedure . . . 189
Commissioning Software . . . 190
Setting the Device Address, Baud Rate and Connection Settings . . . 191
Verifying the Direction of Movement . . . 193
Verifying the Safety Function STO . . . 195
Chapter 15 Tuning the Control Loops . . . 197
Tuning the Control Loops . . . 198
Easy Tuning . . . 199
Comfort Tuning . . . 200
Manual Tuning . . . 205
Part VI Parameters . . . 217
Chapter 16 Servo Drive Parameters . . . 219
Representation of the Parameters . . . 220
P0 - Status Parameters . . . 221
P1 - Basic Parameters . . . 226
P2 - Extended Parameters . . . 235
P3 - Communication Parameters . . . 241
P4 - Diagnostics Parameters . . . 243
P5 - Motion Settings . . . 246
P8 - Control Loops . . . 250
P9 - DTM Data . . . 258

Part VII Operation . . . 263
Chapter 17 Operation . . . 265
Access Channels . . . 266
Operating States . . . 267
Setting the Digital Signal Inputs . . . 268
Setting the Digital Signal Outputs . . . 270
Functions for Target Value Processing . . . 273
Setting a Signal Output Via Parameter . . . 274
Forcing the Digital Signal Inputs and Signal Outputs . . . 275
Position Capture via DS402 Profile . . . 277
Chapter 18 Operating Modes . . . 279
18.1 Setting the Operating Mode . . . 280
Setting the Operating Mode . . . 281
Indication of the Operating State . . . 283
Changing the Operating State . . . 284
Object units . . . 285
18.2 Operating Mode Cyclic Synchronous Torque . . . 287
Operating Mode Cyclic Synchronous Torque . . . 287
18.3 Operating Mode Cyclic Synchronous Velocity . . . 288
Operating Mode Cyclic Synchronous Velocity . . . 288
18.4 Operating Mode Cyclic Synchronous Position . . . 289
Operating Mode Cyclic Synchronous Position . . . 289
18.5 Operating Mode Profile Position . . . 290
Operating Mode Profile Position . . . 291
Example of a Movement Via DS402 Objects . . . 293
18.6 Operating Mode Profile Velocity . . . 294
Operating Mode Profile Velocity . . . 294
18.7 Operating Mode Profile Torque . . . 295
Operating Mode Profile Torque . . . 295
18.8 Operating Mode Homing . . . 297
Operating Mode Homing . . . 297
18.9 Operating Mode Interpolated Position . . . 299
Operating Mode Interpolated Position . . . 299
18.10 Operating Mode Jog . . . 301
Operating Mode Jog . . . 301
Part VIII Diagnostics and Troubleshooting . . . 303
Chapter 19 Diagnostics and Troubleshooting . . . 305
EtherCAT Status . . . 306
Diagnostics Via the Integrated HMI . . . 308
Diagnostics Via the Signal Outputs . . . 309
Diagnostics Via the Commissioning Software . . . 309
Diagnostics Via the Fieldbus . . . 310
Connection for Fieldbus Mode . . . 313
Alert Codes and Error Codes . . . 314
Part IX Service, Maintenance and Disposal . . . 321
Chapter 20 Service, Maintenance, and Disposal . . . 323
General . . . 324
Service Address . . . 325
Maintenance of the Drive . . . 326
Replacement of Drive . . . 327
Maintenance of the Motor . . . 328
Changing the Motor . . . 330
Shipping, Storage, Disposal . . . 331

Part X Fieldbus 333
Chapter 21 EtherCAT Basics 335
Software Features 336
Communication Objects 337
EtherCAT State Machine (ESM) 338
Service Data Communication 339
Process Data Communication 340
Chapter 22 EtherCAT Object Dictionary 343
22.1 Overview 344
Specifications for the Objects 345
Object Dictionary Overview 347
22.2 1000_h…$1FFF_h$ Standard Communication Object Group 348
$10xx_h$ Object Group 349
$16xx_h$ Object Group 351
$1Axx_h$ Object Group 354
$1Cxx_h$ Object Group 357
22.3 4000_h … $4FFF_h$ Vendor-specific Object Group 358
$40xx_h$ Object Group 359
$41xx_h$ Object Group 361
$42xx_h$ Object Group 365
$43xx_h$ Object Group 367
$44xx_h$ Object Group 368
$45xx_h$ Object Group 370
$48xx_h$ Object Group 372
$49xx_h$ Object Group 375
$4Bxx_h$ Object Group 377
$4Fxx_h$ Object Group 379
22.4 6000_h … $6FFF_h$ Device-Specific Object Group 380
$60xx_h$ Object Group 381
$65xx_h$ Object Group 387
Chapter 23 EtherCAT Hardware Setup 389
EtherCAT Connector Description (CN4) 390
Cable Routing Practices 391
Chapter 24 EtherCAT Software Setup 393
24.1 Software Setup with TwinCAT 394
TwinCAT Configuration 395
Setting the Process Data 399
Glossary 401
Index 407

Safety Information

Important Information

NOTICE

Read these instructions carefully, and look at the equipment to become familiar with the device before trying to install, operate, service, or maintain it. The following special messages may appear throughout this documentation or on the equipment to warn of potential hazards or to call attention to information that clarifies or simplifies a procedure.

The addition of this symbol to a “Danger” or “Warning” safety label indicates that an electrical hazard exists which will result in personal injury if the instructions are not followed.

This is the safety alert symbol. It is used to alert you to potential personal injury hazards. Obey all safety messages that follow this symbol to avoid possible injury or death.

DANGER

DANGER indicates a hazardous situation which, if not avoided, **will result in** death or serious injury.

WARNING

WARNING indicates a hazardous situation which, if not avoided, **could result in** death or serious injury.

CAUTION

CAUTION indicates a hazardous situation which, if not avoided, **could result** in minor or moderate injury.

NOTICE

NOTICE is used to address practices not related to physical injury.

PLEASE NOTE

Electrical equipment should be installed, operated, serviced, and maintained only by qualified personnel. No responsibility is assumed by Schneider Electric for any consequences arising out of the use of this material.

A qualified person is one who has skills and knowledge related to the construction and operation of electrical equipment and its installation, and has received safety training to recognize and avoid the hazards involved.

QUALIFICATION OF PERSONNEL

Only appropriately trained persons who are familiar with and understand the contents of this manual and all other pertinent product documentation are authorized to work on and with this product. These persons must have sufficient technical training, knowledge and experience and be able to foresee and detect potential hazards that may be caused by using the product, by modifying the settings and by the mechanical, electrical and electronic equipment of the entire system in which the product is used.

All persons working on and with the product must be fully familiar with all applicable standards, directives, and accident prevention regulations when performing such work.

INTENDED USE

The products described or affected by this document are, along with software, accessories and options, servo drive systems for servo motors and intended for industrial use according to the instructions, directions, examples and safety information contained in the present document and other supporting documentation.

The products may only be used in compliance with all applicable safety regulations and directives, the specified requirements and the technical data.

Prior to using the products, you must perform a risk assessment in view of the planned application. Based on the results, the appropriate safety-related measures must be implemented.

Since the products are used as components in an entire system, you must ensure the safety of persons by means of the design of this entire system.

Operate the products only with the specified cables and accessories. Use only genuine accessories and spare parts.

Any use other than the use explicitly permitted is prohibited and can result in hazards.

About the Book

At a Glance

Document Scope

This document describes the functions of the Servo Drive LXM28E and the BCH2 motor.

Validity Note

This document has been updated with the firmware release of the Lexium 28E V1.75.

The technical characteristics of the devices described in the present document also appear online. To access the information online:

Step	Action
1	Go to the Schneider Electric home page *www.schneider-electric.com*.
2	In the **Search** box type the reference of a product or the name of a product range. ● Do not include blank spaces in the reference or product range. ● To get information on grouping similar modules, use asterisks (*).
3	If you entered a reference, go to the **Product Datasheets** search results and click on the reference that interests you. If you entered the name of a product range, go to the **Product Ranges** search results and click on the product range that interests you.
4	If more than one reference appears in the **Products** search results, click on the reference that interests you.
5	Depending on the size of your screen, you may need to scroll down to see the data sheet.
6	To save or print a data sheet as a .pdf file, click **Download XXX product datasheet**.

The characteristics that are presented in the present document should be the same as those characteristics that appear online. In line with our policy of constant improvement, we may revise content over time to improve clarity and accuracy. If you see a difference between the document and online information, use the online information as your reference.

For product compliance and environmental information (RoHS, REACH, PEP, EOLI, etc.), go to *www.schneider-electric.com/green-premium*.

Related Documents

Use your tablet or your PC to quickly access detailed and comprehensive information on all our products on www.schneider-electric.com.

The internet site provides the information you need for products and solutions:
- The whole catalog for detailed characteristics and selection guides,
- The CAD files to help design your installation,
- All software and firmware to maintain your installation up to date,
- And finally all the User Guides related to your drive, listed below:

Title of documentation	Reference number
Lexium 28E and BCH2 Servo Drive System - User Guide (This document)	EIO0000002454 (English) EIO0000002455 (German) EIO0000002456 (French) EIO0000002457 (Italian) EIO0000002458 (Spanish) EIO0000002459 (Chinese)
Lexium 28E DTM Commissioning software - User Guide	EIO0000002466 (English)
LXM28 - Common DC bus - Application note	0198441114085-EN (English) 0198441114084-DE (German) 0198441114086-FR (French) 0198441114087-IT (Italian) 0198441114088-ES (Spanish) 0198441114089-ZH (Chinese)
HBC Holding Brake Controller -Product Manual	0198441113316 (English)
Multi-loader - User Manual	BBV48778 (English) BBV48777 (French)

You can download these technical publications and other technical information from our website at www.schneider-electric.com/en/download.

Product Related Information

The use and application of the information contained herein require expertise in the design and programming of automated control systems.

Only you, the user, machine builder or integrator, can be aware of all the conditions and factors present during installation and setup, operation, repair and maintenance of the machine or process.

You must also consider any applicable standards and/or regulations with respect to grounding of all equipment. Verify compliance with any safety information, different electrical requirements, and normative standards that apply to your machine or process in the use of this equipment.

Many components of the equipment, including the printed circuit board, operate with mains voltage, or present transformed high currents, and/or high voltages.

The motor itself generates voltage when the motor shaft is rotated.

⚠ DANGER

ELECTRIC SHOCK, EXPLOSION, OR ARC FLASH

- Disconnect all power from all equipment including connected devices prior to removing any covers or doors, or installing or removing any accessories, hardware, cables, or wires.
- Place a "Do Not Turn On" or equivalent hazard label on all power switches and lock them in the non-energized position.
- Wait 15 minutes to allow the residual energy of the DC bus capacitors to discharge.
- Measure the voltage on the DC bus with a properly rated voltage sensing device and verify that the voltage is less than 42.4 Vdc.
- Do not assume that the DC bus is voltage-free when the DC bus LED is off.
- Block the motor shaft to prevent rotation prior to performing any type of work on the drive system.
- Do not create a short-circuit across the DC bus terminals or the DC bus capacitors.
- Replace and secure all covers, accessories, hardware, cables, and wires and confirm that a proper ground connection exists before applying power to the unit.
- Use only the specified voltage when operating this equipment and any associated products.

Failure to follow these instructions will result in death or serious injury.

This equipment has been designed to operate outside of any hazardous location. Only install this equipment in zones known to be free of a hazardous atmosphere.

⚠ DANGER

POTENTIAL FOR EXPLOSION

Install and use this equipment in non-hazardous locations only.

Failure to follow these instructions will result in death or serious injury.

If the power stage is disabled unintentionally, for example as a result of power outage, errors or functions, the motor is no longer decelerated in a controlled way. Overload, errors or incorrect use may cause the holding brake to no longer operate properly and may result in premature wear.

⚠ WARNING

UNINTENDED EQUIPMENT OPERATION

- Verify that movements without braking effect cannot cause injuries or equipment damage.
- Verify the function of the holding brake at regular intervals.
- Do not use the holding brake as a service brake.
- Do not use the holding brake for safety-related purposes.

Failure to follow these instructions can result in death, serious injury, or equipment damage.

Drive systems may perform unanticipated movements because of incorrect wiring, incorrect settings, incorrect data or other errors.

⚠ WARNING

UNINTENDED MOVEMENT OR MACHINE OPERATION

- Carefully install the wiring in accordance with the EMC requirements.
- Do not operate the product with undetermined settings and data.
- Perform comprehensive commissioning tests that include verification of configuration settings and data that determine position and movement.

Failure to follow these instructions can result in death, serious injury, or equipment damage.

⚠ WARNING

LOSS OF CONTROL

- The designer of any control scheme must consider the potential failure modes of control paths and, for certain critical control functions, provide a means to achieve a safe state during and after a path failure. Examples of critical control functions are emergency stop and overtravel stop, power outage and restart.
- Separate or redundant control paths must be provided for critical control functions.
- System control paths may include communication links. Consideration must be given to the implications of unanticipated transmission delays or failures of the link.
- Observe all accident prevention regulations and local safety guidelines.[1]
- Each implementation of this equipment must be individually and thoroughly tested for proper operation before being placed into service.

Failure to follow these instructions can result in death, serious injury, or equipment damage.

[1] For additional information, refer to NEMA ICS 1.1 (latest edition), “Safety Guidelines for the Application, Installation, and Maintenance of Solid State Control” and to NEMA ICS 7.1 (latest edition), “Safety Standards for Construction and Guide for Selection, Installation and Operation of Adjustable-Speed Drive Systems” or their equivalent governing your particular location.

DC Bus Voltage Measurement

The DC bus voltage can exceed 400 Vdc. The DC bus LED is not an indicator of the absence of DC bus voltage.

⚠ DANGER

ELECTRIC SHOCK, EXPLOSION OR ARC FLASH

- Disconnect the voltage supply to all connections.
- Wait 15 minutes to allow the DC bus capacitors to discharge.
- Use a properly rated voltage-sensing device for measuring (greater than 400 Vdc).
- Measure the DC bus voltage between the DC bus terminals (PA/+ and PC/-) to verify that the voltage is less than 42 Vdc
- Contact your local Schneider Electric representative if the DC bus capacitors do not discharge to less than 42 Vdc within a period of 15 minutes.
- Do not operate the product if the DC bus capacitors do not discharge properly.
- Do not attempt to repair the product if the DC bus capacitors do not discharge properly.
- Do not assume that the DC bus is voltage-free when the DC bus LED is off.

Failure to follow these instructions will result in death or serious injury.

Terminology Derived from Standards

The technical terms, terminology, symbols and the corresponding descriptions in this manual, or that appear in or on the products themselves, are generally derived from the terms or definitions of international standards.

In the area of functional safety systems, drives and general automation, this may include, but is not limited to, terms such as *safety*, *safety function*, *safe state*, *fault*, *fault reset*, *malfunction*, *failure*, *error*, *error message*, *dangerous*, etc.

Among others, these standards include:

Standard	Description
IEC 61131-2:2007	Programmable controllers, part 2: Equipment requirements and tests.
ISO 13849-1:2015	Safety of machinery: Safety related parts of control systems. General principles for design.
EN 61496-1:2013	Safety of machinery: Electro-sensitive protective equipment. Part 1: General requirements and tests.
ISO 12100:2010	Safety of machinery - General principles for design - Risk assessment and risk reduction
EN 60204-1:2006	Safety of machinery - Electrical equipment of machines - Part 1: General requirements
ISO 14119:2013	Safety of machinery - Interlocking devices associated with guards - Principles for design and selection
ISO 13850:2015	Safety of machinery - Emergency stop - Principles for design
IEC 62061:2005	Safety of machinery - Functional safety of safety-related electrical, electronic, and electronic programmable control systems
IEC 61508-1:2010	Functional safety of electrical/electronic/programmable electronic safety-related systems: General requirements.
IEC 61508-2:2010	Functional safety of electrical/electronic/programmable electronic safety-related systems: Requirements for electrical/electronic/programmable electronic safety-related systems.
IEC 61508-3:2010	Functional safety of electrical/electronic/programmable electronic safety-related systems: Software requirements.
IEC 61784-3:2016	Industrial communication networks - Profiles - Part 3: Functional safety fieldbuses - General rules and profile definitions.
2006/42/EC	Machinery Directive
2014/30/EU	Electromagnetic Compatibility Directive
2014/35/EU	Low Voltage Directive

In addition, terms used in the present document may tangentially be used as they are derived from other standards such as:

Standard	Description
IEC 60034 series	Rotating electrical machines
IEC 61800 series	Adjustable speed electrical power drive systems
IEC 61158 series	Digital data communications for measurement and control – Fieldbus for use in industrial control systems

Finally, the term *zone of operation* may be used in conjunction with the description of specific hazards, and is defined as it is for a *hazard zone* or *danger zone* in the *Machinery Directive* (*2006/42/EC*) and *ISO 12100:2010*.

NOTE: The aforementioned standards may or may not apply to the specific products cited in the present documentation. For more information concerning the individual standards applicable to the products described herein, see the characteristics tables for those product references.

Part I
Servo Drive System Planning

What Is in This Part?

This part contains the following chapters:

Chapter	Chapter Name	Page
1	General Overview	19
2	Document Navigator	25

Chapter 1
General Overview

What Is in This Chapter?

This chapter contains the following topics:

Topic	Page
Servo Drive Device Overview	20
Drive / Motor References	22

Servo Drive Device Overview

Presentation

The servo drive system includes:

- the drive *(see page 33)* and the motor *(see page 51)*:

- the accessories and spare parts *(see page 89)*:

Item	Description
1	Commissioning tools *(see page 90)*
2	Connectors and adapters *(see page 90)*
3	External mains filters *(see page 90)*
4	DC Bus accessories *(see page 91)* (1)
5	Application nameplate *(see page 91)*
6	Fieldbus accessories *(see page 92)*
7	Motor cables *(see page 93)*
8	Encoder cables *(see page 93)*
9	Signal cables *(see page 93)*
10	Signal cables for safety function STO *(see page 94)*
11	External braking resistors *(see page 94)*
12	Circuit breakers *(see page 94)*
13	Motor protection switches and power contractors *(see page 95)*
(1) Not available for LXM28E•••M1X drives.	

Drive / Motor References

Introduction

The present user guide provides information about the following Drives and Motors reference tables.

The Lexium 28E range is defined by AC-servo drives Lexium 28E for combination with AC-servo motors BCH2.

- The combinations of servo motors with servo drives are based on the power class: both servo motor and servo drive must have the same power class.
- The bundle of a servo drive with its related servo motor is designed to cover a nominal power from:
  - 0.05 kW up to 4.5 kW (0.067 up to 6.03 hp) with 200…240 V mains supply voltage.
  - 0.05 kW up to 0.75 kW (0.067 up to 1.005 hp) with 100…120 V mains supply voltage.

Compatibility between Drive and Motor is defined in the Drive / Motor combinations table *(see page 24)*.

Lexium 28E Drive References List

Drive references	Nominal power	Supply mains
LXM28EUA5M1X	50 W	single phase, 110 Vac
LXM28EU01M1X	100 W	single phase, 110 Vac
LXM28EU02M1X	200 W	single phase, 110 Vac
LXM28EU04M1X	400 W	single phase, 110 Vac
LXM28EU07M1X	750 W	single phase, 110 Vac
LXM28EUA5M3X	50 W	single phase or 3-phase, 230 Vac
LXM28EU01M3X	100 W	single phase or 3-phase, 230 Vac
LXM28EU02M3X	200 W	single phase or 3-phase, 230 Vac
LXM28EU04M3X	400 W	single phase or 3-phase, 230 Vac
LXM28EU07M3X	750 W	single phase or 3-phase, 230 Vac
LXM28EU10M3X	1000 W	single phase or 3-phase, 230 Vac
LXM28EU15M3X	1500 W	single phase or 3-phase, 230 Vac
LXM28EU20M3X	2000 W	3-phase, 230 Vac
LXM28EU30M3X	3000 W	3-phase, 230 Vac
LXM28EU45M3X	4500 W	3-phase, 230 Vac

For further information, refer to the servo drive general overview *(see page 34)*.

BCH2 Motor References List

Motor references	Nominal power
BCH2MBA53•••5C	50 W
BCH2MB013•••5C	100 W
BCH2LD023•••5C	200 W
BCH2MM031•••6C	300 W
BCH2LD043•••5C	400 W
BCH2LF043•••5C	400 W
BCH2MM052•••6C	500 W
BCH2MM061•••6C	600 W
BCH2HF073•••5C	750 W
BCH2LF073•••5C	750 W
BCH2MM081•••6C	850 W
BCH2MM091•••6C	900 W
BCH2MM102•••6C	1000 W
BCH2HM102•••6C	1000 W
BCH2LH103•••6C	1000 W
BCH2MM152•••6C	1500 W
BCH2MM202•••6C	2000 W
BCH2MR202•••6C	2000 W
BCH2HR202•••6C	2000 W
BCH2LH203•••6C	2000 W
BCH2MR301•••6C	3000 W
BCH2MR302•••6C	3000 W
BCH2MR352•••6C	3500 W
BCH2MR451•••6C	4500 W

For further information, refer to Servo Motor Type Code *(see page 56)*.

Drive / Motor Combinations

The permissible Drive / Motor Combinations are detailed in the following table:

Drive	Motor	Nominal power	Nominal speed of rotation	Nominal torque	Peak torque	Rotor inertia without holding brake	Moment of inertia
		W	rpm	Nm	Nm	kg.cm^2	-
Devices 110 Vac that can be connected via a single phase							
LXM28EUA5M1X	BCH2MBA53•••5C	50	3000	0.16	0.48	0.054	Medium
LXM28EU01M1X	BCH2MB013•••5C	100	3000	0.32	0.96	0.075	Medium
LXM28EU02M1X	BCH2LD023•••5C	200	3000	0.64	1.92	0.16	Low
LXM28EU04M1X	BCH2LD043•••5C	400	3000	1.27	3.81	0.27	Low
	BCH2LF043•••5C	400	3000	1.27	3.81	0.67	Low
LXM28EU07M1X	BCH2LF073•••5C	750	3000	2.39	7.16	1.19	Low
	BCH2HF073•••5C	750	3000	2.39	7.16	1.54	High
Devices 220 Vac that can be connected via a single phase or three phases							
LXM28EUA5M3X	BCH2MBA53•••5C	50	3000	0.16	0.48	0.054	Medium
LXM28EU01M3X	BCH2MB013•••5C	100	3000	0.32	0.96	0.075	Medium
LXM28EU02M3X	BCH2LD023•••5C	200	3000	0.64	1.92	0.16	Low
LXM28EU04M3X	BCH2MM031•••6C	300	1000	2.86	8.59	6.63	Medium
	BCH2LD043•••5C	400	3000	1.27	3.81	0.27	Low
	BCH2LF043•••5C	400	3000	1.27	3.81	0.67	Low
LXM28EU07M3X	BCH2MM052•••6C	500	2000	2.39	7.16	6.63	Medium
	BCH2MM061•••6C	600	1000	5.73	17.19	6.63	Medium
	BCH2LF073•••5C	750	3000	2.39	7.16	1.19	Low
	BCH2HF073•••5C	750	3000	2.39	7.16	1.54	High
LXM28EU10M3X	BCH2MM081•••6C	850	1500	5.39	13.8	13.5	Medium
	BCH2MM091•••6C	900	1000	8.59	25.77	9.7	Medium
	BCH2LH103•••6C	1000	3000	3.18	9.54	2.4	Low
	BCH2MM102•••6C	1000	2000	4.77	14.3	6.63	Medium
	BCH2HM102•••6C	1000	2000	4.77	14.3	8.41	High
LXM28EU15M3X	BCH2MM152•••6C	1500	2000	7.16	21.48	9.7	Medium
Devices 220 Vac that can be connected via three phases							
LXM28EU20M3X	BCH2LH203•••6C	2000	3000	6.37	19.11	4.28	Low
	BCH2MM202•••6C	2000	2000	9.55	28.65	13.5	Medium
	BCH2MR202•••6C	2000	2000	9.55	28.65	26.5	Medium
	BCH2HR202•••6C	2000	2000	9.55	28.65	34.68	High
LXM28EU30M3X	BCH2MR301•••6C	3000	1500	19.1	57.29	53.56	Medium
	BCH2MR302•••6C	3000	2000	14.32	42.97	53.56	Medium
LXM28EU45M3X	BCH2MR352•••6C	3500	2000	16.7	50.3	53.56	Medium
	BCH2MR451•••6C	4500	1500	28.65	71.62	73.32	Medium

Chapter 2
Document Navigator

Document Navigator

Document Content

This user guide contains following data:

- Technical data *(see page 27)*
  - Conditions for UL 508C and CSA *(see page 29)*
  - Drive *(see page 33)*
  - Motor *(see page 51)*
  - Accessories and spare parts *(see page 89)*
- Engineering *(see page 97)*
- Installation *(see page 127)*
  - Before mounting *(see page 129)*
  - Drive installation *(see page 133)*
  - Motor installation *(see page 165)*
  - Verifying installation *(see page 175)*
- Commissioning *(see page 177)*
  - Overview *(see page 179)*
  - Integrated HMI *(see page 183)*
  - Commissioning procedure *(see page 189)*
  - Tuning the control loop *(see page 197)*
- Parameters *(see page 217)*
- Operation *(see page 263)*
  - Operation *(see page 265)*
  - Operating modes *(see page 279)*
- Diagnostics and troubleshooting *(see page 303)*
- Service, maintenance and disposal *(see page 321)*
- Fieldbus *(see page 333)*
  - EtherCAT basics *(see page 335)*
  - EtherCAT object dictionary *(see page 343)*
  - EtherCAT hardware setup *(see page 389)*
  - EtherCAT software setup *(see page 393)*

Part II
Servo Drive System Technical Data

What Is in This Part?

This part contains the following chapters:

Chapter	Chapter Name	Page
3	Certifications	29
4	Drive	33
5	Motor	51
6	Accessories and Spare Parts	89

Chapter 3
Certifications

Download links

Item	Link
UL certification status	UL_InfoBY01
EU Declaration of conformity	NHA3487100
TÜV certificate	TUEV_0120554010014
KC certificate - Reference group 1	KC_1333-B797-B43E-FC6C
KC certificate - Reference group 2	KC_8812-6AC0-ECBC-1757
KC certificate - Reference group 3	KC_AE96-6B40-C214-7A18
KC certificate - Reference group 4	KC_A1BB-480B-E156-0EF1

What Is in This Chapter?

This chapter contains the following topics:

Topic	Page
Conditions for UL 508C	30
Conditions for CSA	31

Conditions for UL 508C

Introduction

The UL certification status can be downloaded on the *Schneider Electric* website.

If the product is used to comply with UL 508C, the following conditions must also be met.

Wiring

Use at least 75 °C (167 °F) copper conductors.

Fuses

Use fuses as per UL 248 or circuit breaker as per UL 489.

LXM28E	UA5, U01, U02, U04, U07, U10, U15	U20, U30, U45
Maximum fuse rating of fuse to be connected upstream	25 A	32 A
Class if fuses are used	J	J
Class if circuit breakers are used	D	D

Overvoltage Category

Use only in overvoltage category III or where the maximum available Rated Impulse Withstand Voltage Peak is equal or less than 4000 Volts, or equivalent as defined in UL 840 and its equivalent defined in IEC 60664-1.

Conditions for CSA

The CSA certificate can be downloaded on the *Schneider Electric* website.

If the product is used to comply with CSA, the following conditions must also be met.

Integral solid-state short circuit protection in these drives does not provide branch circuit protection.

⚠ DANGER

ELECTRIC SHOCK, EXPLOSION OR ARC FLASH

Provide branch circuit protection in accordance with the manual instructions, National Electrical Code and any additional local codes of the type and size specified in the present document.

Failure to follow these instructions will result in death or serious injury.

For reference groups 1, 2, 3, and 4 (see Fuse Types table), this product is suitable for use on a circuit capable of delivering not more than 200 kA RMS symmetrical amperes and 230 Vac (LXM28E•••M3X) or 120 Vac (LXM28E•••M1X) maximum, when protected by Listed Class J, CC or RK5 fuses as indicated in this instruction manual and the Fuse Types table. Instead of fuses, protection may be provided by circuit breakers of type C60 by Schneider Electric with the maximum current ratings specified in the Fuse Types table.

For reference group 1 only, this product is suitable for motor group installation on a circuit capable of delivering not more than 5 kA RMS symmetrical amperes and 230 Vac (LXM28E•••M3X) or 120 Vac (LXM28E•••M1X) maximum, when protected by Listed Class J or CC fuses as indicated in the instruction manual and the Fuse Types table. Instead of fuses, protection may be provided by circuit breakers of type C60 by Schneider Electric with the maximum current ratings specified in the Fuse Types table.

The opening of the branch-circuit protective device may be an indication that an electrical interruption has been detected.

⚠ DANGER

ELECTRIC SHOCK, EXPLOSION OR ARC FLASH

- Examine all current carrying parts and other components of the drive controller for damage and replace if necessary before replacing fuses or engaging circuit breakers.
- Completely replace overload relays if burnout of the current element occurs.

Failure to follow these instructions will result in death or serious injury.

Capacitive voltages above 40 V may remain for up to 15 minutes after power is removed from the drive.

⚠ DANGER

ELECTRIC SHOCK, EXPLOSION, OR ARC FLASH

- Disconnect all power from all equipment including connected devices prior to removing any covers or doors, or installing or removing any accessories, hardware, cables, or wires.
- Place a "Do Not Turn On" or equivalent hazard label on all power switches and lock them in the non-energized position.
- Wait 15 minutes to allow the residual energy of the DC bus capacitors to discharge.
- Measure the voltage on the DC bus with a properly rated voltage sensing device and verify that the voltage is less than 42.4 Vdc.
- Do not assume that the DC bus is voltage-free when the DC bus LED is off.
- Block the motor shaft to prevent rotation prior to performing any type of work on the drive system.
- Do not create a short-circuit across the DC bus terminals or the DC bus capacitors.
- Replace and secure all covers, accessories, hardware, cables, and wires and confirm that a proper ground connection exists before applying power to the unit.
- Use only the specified voltage when operating this equipment and any associated products.

Failure to follow these instructions will result in death or serious injury.

These drives are provided with load and speed adjustable motor overload and short circuit protection. Adjust the parameter P1-78 'User-Defined maximal current' in the drive which protects the motor by limiting the maximum current according to the required degree of protection of the motors as indicated on the name plate.

Other Characteristics

Maximum surrounding Air Temperature: 40…55 °C (104…131 °F) with current derating of 1% per °C (per 1.8 °F).

Tightening torque for the connectors labelled CN5, CN7 and CN8 for drive reference group:
- 3 and 4: 0.7 … 0.8 Nm (6.2 … 7 lb.in)

Fuse Types

Reference Group	Reference	Class	Maximum Current
1	LXM28EUA5M3X	CC or J	25 A
	LXM28EU01M3X		
	LXM28EU02M3X		
	LXM28EU04M3X		
	LXM28EU07M3X		
2	LXM28EUA5M1X	RK5 or CC or J	25 A
	LXM28EU01M1X		
	LXM28EU02M1X		
	LXM28EU04M1X		
	LXM28EU07M1X		
	LXM28EU10M3X	RK5 or CC or J	25 A
	LXM28EU15M3X		
3	LXM28EU20M3X	RK5 or J	45 A
4	LXM28EU30M3X	RK5 or J	50 A
	LXM28EU45M3X		

Chapter 4
Drive

What Is in This Chapter?

This chapter contains the following sections:

Section	Topic	Page
4.1	General Overview	34
4.2	Drive Technical Data	38

Section 4.1
General Overview

What Is in This Section?

This section contains the following topics:

Topic	Page
Servo Drive Description	35
Servo Drive Nameplate	36
Servo Drive Type Code	37

Servo Drive Description

Presentation

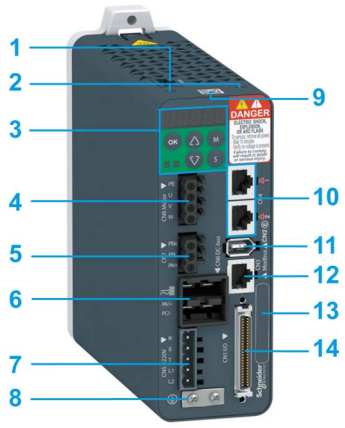

Item	Description	Connector
1	Connector for safety function STO	CN9 *(see page 162)*
2	Slot for application name plate (VW3M2501)	-
3	HMI: 7-segment display, 5 buttons, and 2 status LED	-
4	Terminal for motor connection	CN8 *(see page 158)*
5	Terminal for braking resistor connection	CN7 *(see page 156)*
6	DC-bus connector(1) with status LED	CN6 *(see page 155)*
7	Terminal for connecting the power supply	CN5 *(see page 152)*
8	Screw terminal for protective ground (protective earth)	-
9	QR code for access to technical data	-
10	2 x RJ45 connectors for integrated fieldbus connection	CN4 *(see page 150)*
11	Connector for the encoder of the motor	CN2 *(see page 146)*
12	RJ45 connector for Modbus serial link	CN3 *(see page 148)*
13	Device Reference	-
14	Input/output connector	CN1 *(see page 139)*
(1) Not available for LXM28E•••M1X drives.		

Integrated Fieldbus

The Lexium 28E Servo Drive embeds a dual port EtherCAT adapter that can be used in an EtherCAT industrial fieldbus.

Parameters Access

Servo drive parameters *(see page 219)* may be accessed using:
- The integrated HMI
- The Device Type Manager (DTM)
- Directly using the fieldbus address of the device to read and write to parameters using the object dictionary

Object Dictionary

The EtherCAT objects may be accessed through the fieldbus, using their address.

The objects Drive Parameters are identified by their name in the **Parameter** column in the object dictionary table.

Three groups of objects are available in the object dictionary.
- 1000_h - $1FFF_h$: Standard communication Object Group *(see page 348)*
- 4000_h - $4FFF_h$: Vendor-specific Object Group *(see page 358)*
- 6000_h - $6FFF_h$: Device profile Object Group *(see page 380)*

Servo Drive Nameplate

Presentation

The nameplate contains the following data:

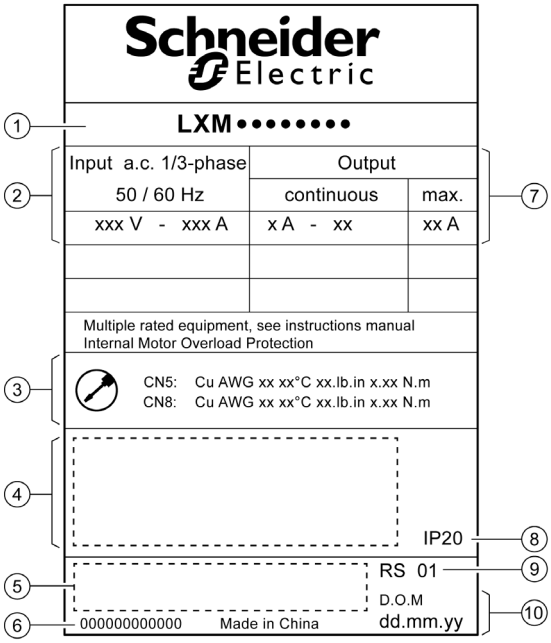

Item	Description
1	Drive reference *(see page 37)*
2	Logic supply
3	Cable specifications
4	Certifications
5	Barcode
6	Serial number
7	Output power
8	Degree of protection
9	Hardware version
10	Date of manufacture

Servo Drive Type Code

Servo Drive Type Code

Item	1	2	3	4	5
Type code (example)	LXM	28	E	U07	M3X

Item	Meaning
1	**Product designation** LXM = Lexium
2	**Product type** 28 = AC servo drive for one axis
3	**Interfaces** E = EtherCAT, I/O interface, commissioning via Modbus RTU
4	**Continuous power** UA5 = 0.05 kW U01 = 0.1 kW U02 = 0.2 kW U04 = 0.4 kW U07 = 0.75 kW U10 = 1 kW U15 = 1.5 kW U20 = 2 kW U30 = 3 kW U45 = 4.5 kW
5	**Power stage supply [Vac]** M1X = single phase, 100/120 Vac M3X = single phase or 3-phase, 200/230 Vac

Section 4.2
Drive Technical Data

What Is in This Section?

This section contains the following topics:

Topic	Page
Environmental Conditions	39
Dimensions	41
Electrical Data	43
Single-Phase Connection	45
Three-Phase Connection	47
Inputs / Outputs Characteristics	49

Environmental Conditions

Ambient Conditions During Operation

The maximum permissible ambient temperature during operation depends on the mounting distances between the devices and on the required power. Observe the instructions in the chapter Installation *(see page 134)*.

Description	Unit	Value
Ambient temperature without current derating (no icing, non-condensing	°C (°F)	0…40 (32…104)
Ambient temperature with current derating of 1% per 1 °C (1.8 °F)	°C (°F)	40…55 (104…131)

The following relative humidity is permissible during operation:

Description	Unit	Value
Relative humidity (non-condensing)	%	<95

Description	Unit	Value
Installation altitude above mean sea level without current derating	m (ft)	<2000 (<6561)

Ambient Conditions During Transportation and Storage

The environment during transportation and storage must be dry and free from dust.

Description	Unit	Value
Temperature	°C (°F)	-25…65 (-4…149)

The following relative humidity is permissible during transportation and storage:

Description	Unit	Value
Relative humidity (non-condensing)	%	<95

Installation Site and Connection

For operation, the device must be mounted in a closed control cabinet with a degree of protection of at least IP 54. The device may only be operated with a permanently installed connection.

⚠ DANGER

ELECTRIC SHOCK, EXPLOSION, OR ARC FLASH

Install the drive in a control cabinet or housing with a minimum IP 54 rating.

Failure to follow these instructions will result in death or serious injury.

Pollution Degree and Degree of Protection

Description	Value
Pollution degree	2
Degree of protection	IP20

Degree of Protection When the Safety Function Is Used

You must ensure that conductive substances cannot get into the product (pollution degree 2). Conductive substances may cause the safety function to become inoperative.

⚠ WARNING

INOPERABLE SAFETY FUNCTION

Ensure that conductive substances (water, contaminated or impregnated oils, metal shavings, etc.) cannot get into the drive.

Failure to follow these instructions can result in death, serious injury, or equipment damage.

Vibration and Shock During Operation

Description	Value
Class as per IEC 60721-3-3	3M4 3 mm from 9…200 Hz
Maximum shock	98.1 m/s^2 (10 g) Type I

Vibration and Shock During Transportation and Storage

Description	Value
Class as per IEC 60721-3-2	2M2 3.5 mm (2…9 Hz) 9.81 m/s^2 (1 g) from 9…200 Hz 14.715 m/s^2 (1.5 g) from 200…500 Hz 34.335 m/s^2 (3.5 g) from 2…9 Hz
Maximum shock	294.3 m/s^2 (30 g) Type II

Dimensions

Lexium 28E Dimensions

LXM28EUA5, LXM28EU01, LXM28EU02, LXM28EU04, LXM28EU07, LXM28EU10, LXM28EU15, LXM28EU20

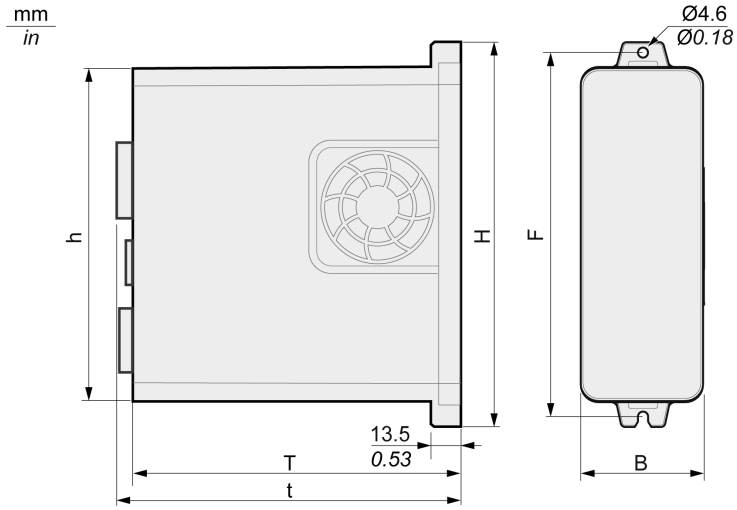

LXM28E	Unit	UA5M3X, U01M3X, U02M3X, U04M3X, U07M3X	U10M3X, U15M3X UA5M1X, U01M1X, U02M1X, U04M1X, U07M1X	U20M3X
B	mm (in)	55 (2.17)	55 (2.17)	62 (2.44)
H	mm (in)	173.2 (6.82)	173.5 (6.83)	194.5 (7.66)
h	mm (in)	150 (5.91)	150 (5.91)	170 (6.69)
F	mm (in)	164 (6.46)	164 (6.46)	185 (7.28)
T	mm (in)	146 (5.75)	170 (6.69)	184 (7.24)
t	mm (in)	152.7 (6.01)	176.3 (6.94)	197 (7.76)

LXM28EU30, LXM28EU45

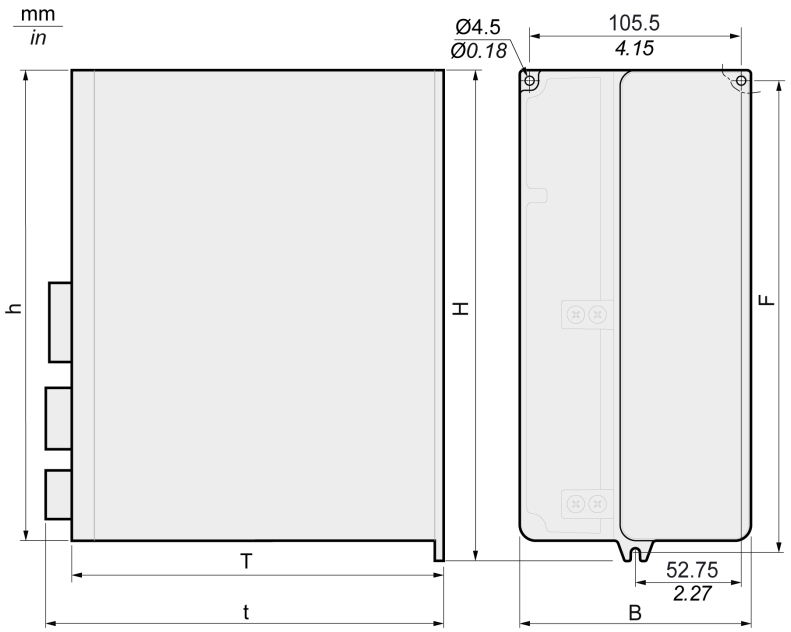

LXM28E	Unit	U30M3X, U45M3X
B	mm (in)	116 (4.57)
H	mm (in)	245 (9.65)
h	mm (in)	234 (9.21)
F	mm (in)	235 (9.25)
T	mm (in)	186 (7.32)
t	mm (in)	199 (7.83)

Electrical Data

Introduction

The products are intended for industrial use and may only be operated with a permanently installed connection.

110 Vac Mains Voltage: Range and Tolerance

LXM28E•••M1X

Description	Unit	Value
110 Vac single-phase (LXM28E•••M1X)	Vac	120 -10 % ... 120 +10 %
Frequency	Hz	50 -5 % ... 60 +5 %
Transient overvoltages	–	Overvoltage category III(1)
Rated voltage to ground	Vac	120
(1) Depends on installation altitude, see Environmental Conditions *(see page 39)*		

220 Vac Mains Voltage: Range and Tolerance

LXM28E•••M3X

Description	Unit	Value
220 Vac single-phase/three-phase (LXM28E•••M3X)	Vac	200 -15 % ... 230 +10 %
Frequency	Hz	50 -5 % ... 60 +5 %
Transient overvoltages	–	Overvoltage category III(1)
Rated voltage to ground	Vac	230
(1) Depends on installation altitude, see Environmental Conditions *(see page 39)*		

Type of Grounding

Description	Value
TT grounding system, TN grounding system	Approved
IT mains	Not approved
Mains with grounded line conductor	Not approved

Leakage Current

Description	Unit	Value
Leakage current (as per IEC 60990, figure 3)	mA	<30(1)
(1) Measured on mains with grounded neutral point and without external mains filter. Take into account that a 30 mA RCD can already trigger at 15 mA. In addition, there is a high-frequency leakage current which is not considered in the measurement. The response to this depends on the type of residual current device.		

Monitoring of the Continuous Output Power

The continuous output power is monitored by the device. If the continuous output power is exceeded, the device reduces the output current.

PWM Frequency Power Stage

PWM frequency power stage The PWM frequency of the power stage is set to a fixed value.

LXM28E	UA5, U01, U02, U04, U07, U10, U15	U20, U30, U45
PWM frequency power stage	16 kHz	8 kHz

Type of Cooling

LXM28E	UA5, U01, U02	U04, U07, U10, U15, U20, U30, U45
Type of cooling	Convection	Fan

Permissible Drive / Motor Combinations

The BCH2 motors can be connected to the Lexium 28E drive range.

Compatibility between Drive and Motor is defined in the Drive / Motor combinations table *(see page 24)*.

Single-Phase Connection

Electrical Data for LXM28E•••M1X Drive Connected Via a Single-Phase 110 Vac

LXM28E•••M1X	Unit	UA5	U01	U02	U04	U07
Nominal voltage	V	120 (single-phase)				
Inrush current limitation	A	8				
Maximum fuse to be connected upstream(1)	A	25				
Short-circuit current rating (SCCR)	kA	5				
Continuous output current	A_{rms}	0.64	0.9	1.5	2.6	4.5
Peak output current	A_{rms}	2	2.7	4.5	7.8	13.5
Nominal power(2)	W	50	100	200	400	750
Input current(2)(3)	A_{rms}	1.2	1.8	3.6	5.7	13.5
THD (total harmonic distortion)(2)(4)	%	262.8	239.2	226.8	211.6	181.8
Power dissipation(5)	W	8	10	14	22	38
Maximum inrush current(6)	A	175				
Time for maximum inrush current	ms	0.5				

(1) As per IEC 60269; Circuit breakers with C characteristic; See Conditions for UL 508C *(see page 29)* for UL and CSA; Lower ratings are permissible; The fuse must be rated in such a way that the fuse does not trip at the specified input current.
(2) At a mains impedance corresponding to the short-circuit current rating (SCCR)
(3) At nominal power and nominal voltage
(4) With reference to the input current
(5) Condition: internal braking resistor not active; value at nominal current, nominal voltage, and nominal power; value approximately proportional with output current
(6) Extreme case, off/on pulse before the inrush current limitation responds, see next line for maximum time

DC bus data for drives connected via a single-phase 110 Vac

LXM28E•••M1X	Unit	UA5	U01	U02	U04	U07
Nominal voltage (single-phase)	Vac	120				
Nominal voltage DC bus	Vdc	322				
Undervoltage limit	Vdc	100				
Overvoltage limit	Vdc	420				
Maximum continuous power via DC bus	W	50	100	200	400	750
Maximum continuous power via DC bus	A	0.2	0.3	0.6	1.2	2.3

Electrical Data for LXM28E•••M3X Drive Connected Via a Single-Phase 220 Vac

LXM28E•••M3X	Unit	UA5	U01	U02	U04	U07	U10	U15
Nominal voltage	V	230 (single-phase)						
Inrush current limitation	A	8						
Maximum fuse to be connected upstream(1)	A	25						
Short-circuit current rating (SCCR)	kA	5						
Continuous output current	A_{rms}	0.64	0.9	1.5	2.6	4.5	7	7
Peak output current	A_{rms}	2	2.7	4.5	7.8	13.5	21	21
Nominal power(2)	W	50	100	200	400	750	1000	1500
Input current(2)(3)	A_{rms}	0.8	1.2	2.4	3.8	6	8.5	10
THD (total harmonic distortion)(2)(4)	%	262.8	239.2	226.8	211.6	181.8	176.3	166.6
Power dissipation(5)	W	8	10	14	22	38	36	41
Maximum inrush current(6)	A	175					235	
Time for maximum inrush current	ms	0.5					0.6	

(1) As per IEC 60269; Circuit breakers with C characteristic; See Conditions for UL 508C *(see page 29)* for UL and CSA; Lower ratings are permissible; The fuse must be rated in such a way that the fuse does not trip at the specified input current.
(2) At a mains impedance corresponding to the short-circuit current rating (SCCR)
(3) At nominal power and nominal voltage
(4) With reference to the input current
(5) Condition: internal braking resistor not active; value at nominal current, nominal voltage, and nominal power; value approximately proportional with output current
(6) Extreme case, off/on pulse before the inrush current limitation responds, see next line for maximum time

DC bus data for drives connected via a single-phase 220 Vac

LXM28E•••M3X	Unit	UA5	U01	U02	U04	U07	U10	U15
Nominal voltage (single-phase)	Vac	230						
Nominal voltage DC bus	Vdc	322						
Undervoltage limit	Vdc	160						
Overvoltage limit	Vdc	420						
Maximum continuous power via DC bus	W	50	100	200	400	750	1000	1500
Maximum continuous power via DC bus	A	0.2	0.3	0.6	1.2	2.3	3.1	4.6

Three-Phase Connection

Electrical Data for LXM28E•••M3X Drive Connected Via Three-Phase 220 Vac

LXM28E•••M3X	Unit	UA5	U01	U02	U04	U07	U10
Nominal voltage	V	230 (3-phase)					
Inrush current limitation	A	8					
Maximum fuse to be connected upstream(1)	A	25					
Short-circuit current rating (SCCR)	kA	5					
Continuous output current	A_{rms}	0.64	0.9	1.5	2.6	4.5	7
Peak output current	A_{rms}	2	2.7	4.5	7.8	13.5	21
Nominal power(2)	W	50	100	200	400	750	1000
Input current(2)(3)	A_{rms}	0.42	0.74	1.25	2.2	3.9	5
THD (total harmonic distortion)(2)(4)	%	227.8	212.7	200.7	183.7	160.8	155.5
Power dissipation(5)	W	8	10	14	22	38	36
Maximum inrush current(6)	A	175					235
Time for maximum inrush current	ms	0.5					0.6

(1) As per IEC 60269; Circuit breakers with C characteristic; See Conditions for UL 508C *(see page 29)* for UL and CSA; Lower ratings are permissible; The fuse must be rated in such a way that the fuse does not trip at the specified input current.
(2) At a mains impedance corresponding to the short-circuit current rating (SCCR)
(3) At nominal power and nominal voltage
(4) With reference to the input current
(5) Condition: internal braking resistor not active; value at nominal current, nominal voltage, and nominal power; value approximately proportional with output current
(6) Extreme case, off/on pulse before the inrush current limitation responds, see next line for maximum time

LXM28E•••M3X	Unit	U15	U20	U30	U45
Nominal voltage	V	230 (3-phase)			
Inrush current limitation	A	8	19.2	17	
Maximum fuse to be connected upstream(1)	A	25	32		
Short-circuit current rating (SCCR)	kA	5		22	
Continuous output current	A_{rms}	7	12	19.8	22.8
Peak output current	A_{rms}	21	36	60	61
Nominal power(2)	W	1500	2000	3000	4500
Input current(2)(3)	A_{rms}	5.9	8.7	12.9	18
THD (total harmonic distortion)(2)(4)	%	144.8	137.1	155.8	147.1
Power dissipation(5)	W	41		97	
Maximum inrush current(6)	A	235	295	300	
Time for maximum inrush current	ms	0.6	1.0		

(1) As per IEC 60269; Circuit breakers with C characteristic; See Conditions for UL 508C *(see page 29)* for UL and CSA; Lower ratings are permissible; The fuse must be rated in such a way that the fuse does not trip at the specified input current.
(2) At a mains impedance corresponding to the short-circuit current rating (SCCR)
(3) At nominal power and nominal voltage
(4) With reference to the input current
(5) Condition: internal braking resistor not active; value at nominal current, nominal voltage, and nominal power; value approximately proportional with output current
(6) Extreme case, off/on pulse before the inrush current limitation responds, see next line for maximum time

DC bus data for drives connected via three-phase 220 Vac

LXM28E•••M3X	Unit	UA5	U01	U02	U04	U07	U10
Nominal voltage (three phases)	Vac	230					
Nominal voltage DC bus	Vdc	322					
Undervoltage limit	Vdc	160					
Overvoltage limit	Vdc	420					
Maximum continuous power via DC bus	W	50	100	200	400	750	1000
Maximum continuous power via DC bus	A	0.2	0.3	0.6	1.2	2.3	3.1

LXM28E•••M3X	Unit	U15	U20	U30	U45
Nominal voltage (three phases)	Vac	230			
Nominal voltage DC bus	Vdc	322			
Undervoltage limit	Vdc	160			
Overvoltage limit	Vdc	420			
Maximum continuous power via DC bus	W	1500	2000	3000	4500
Maximum continuous power via DC bus	A	4.6	6.2	9.2	13.8

Inputs / Outputs Characteristics

Logic Type

The outputs are short-circuit protected. The inputs and outputs are galvanically isolated.

The digital inputs and outputs of this product can be wired for positive or negative logic.

Logic type	Active state
Positive logic	Output supplies current (source output) Current flows to the input (sink input)
Negative logic	Output draws current (sink output) Current flows from the input (source input)

Digital Input Signals 24 V

When wired as positive logic, the levels of the opto-isolated inputs DI1...DI5 and DI8 comply with IEC 61131-2, type 1. The electrical characteristics are also valid when wired as negative logic.

Description	Unit	Value
“0” signal voltage	Vdc	≤5
“1” signal voltage	Vdc	≥11
Input current (typical)	mA	6
Debounce time(1)	mA	0...20
(1) Adjustable via parameter P2-09 in increments of 1 ms.		

Digital Output Signals 24 V

The levels of the digital 24 V output signals DO• comply with IEC 61131-2.

Description	Unit	Value
Switching voltage	Vdc	24
Maximum switching current	mA	100
Voltage drop at 100 mA load	Vdc	< 3

Touch Probe Input Signals 24 V

When wired as positive logic, the levels of the opto-isolated inputs DI6 and DI7 comply with IEC 61131-2, type 1. The electrical characteristics are also valid when wired as negative logic.

Description	Unit	Value
“0” signal voltage	Vdc	≤5
“1” signal voltage	Vdc	≥11
Input current (typical)	mA	7
Debounce time(1)	µs	0...100
Jitter Capture	µs	1
(1) Adjustable via parameter P2-24 in increments of 1 µs.		

Safety Function STO

The signal inputs $\overline{\text{STO_0V}}$ and $\overline{\text{STO_24V}}$ (CN9) are protected against reverse polarity.

Description	Unit	Value
Nominal voltage	Vdc	24
PELV power supply unit	–	Required
“0” signal voltage (1)	Vdc	< 5
“1” signal voltage (1)	Vdc	15...30
Input current (typical) LXM28EUA5M3X, U01M3X, U02M3X, U04M3X, U07M3X LXM28EUA5M1X, U01M1X, U02M1X, U04M1X, U07M1X LXM28EU10M3X, U15M3X LXM28EU20 LXM28EU30, U45	mA	 190 190 190 190 240
Maximum peak current	A	18
Maximum frequency for OSSD (Output Signal Switching Device) test pulses	Hz	475
Debounce time	ms	< 1
Response time of safety function STO	ms	< 40
(1) Voltage level according to IEC 61131-2 type 2 with the exception of the operation with 15 Vdc instead of 11 Vdc. The condition between 5 Vdc and 15 Vdc is undefined and not permissible.		

For further information, refer to data for maintenance plan and the calculation for the safety function *(see page 112)*.

24 Vdc Power Supply (Pin 17):

24 Vdc power supply (pin 17):

Description	Unit	Value
Output voltage	Vdc	24
Maximum output current	mA	200

Ethernet Signals:

The Ethernet signals comply with the Ethernet standard.

ESIM Output Signals

The ESIM output signals comply with the RS422 interface specification.

Description	Unit	Value
Logic level	–	As per RS422(1)
Output frequency per signal	kHz	800
Maximum output frequency (quadruple evaluation)	kHz	3200
(1) Due to the input current of the optocoupler in the input circuit, a parallel connection of a driver output to several devices is not permitted.		

Chapter 5
Motor

What Is in This Chapter?

This chapter contains the following sections:

Section	Topic	Page
5.1	General Overview	52
5.2	Motor Technical Data	57
5.3	BCH2MB Motor	61
5.4	BCH2LD Motor	65
5.5	BCH2•F Motor	69
5.6	BCH2LH Motor	73
5.7	BCH2•M Motor	77
5.8	BCH2•R Motor	83

Section 5.1
General Overview

What Is in This Section?

This section contains the following topics:

Topic	Page
Components and Interfaces	53
Servo Motor Nameplate	54
Servo Motor Type Code	56

Components and Interfaces

Presentation

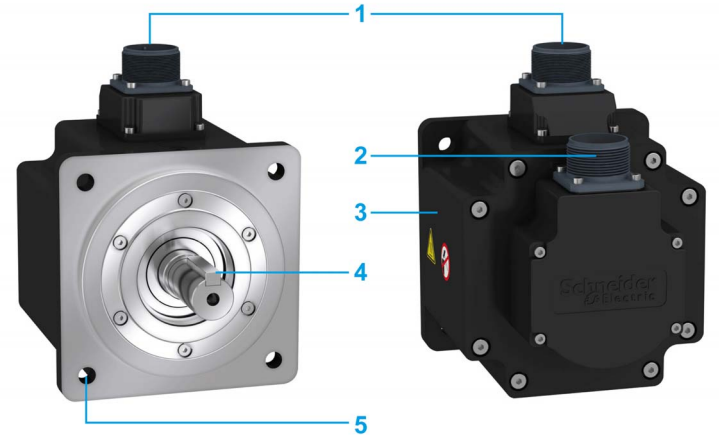

BCH2 servo motors, with a 3-phase stator and rotor with rare earth-based permanent magnets, consist of:

Item	Description
1	Connector of the motor cable *(see page 93)*
2	Connector of the encoder cable *(see page 93)*
3	Housing
4	Smooth or keyed shaft end, depending on the motor reference
5	4-point axial mounting flange

Servo Motor Nameplate

BCH2•B

The nameplate contains the following data:

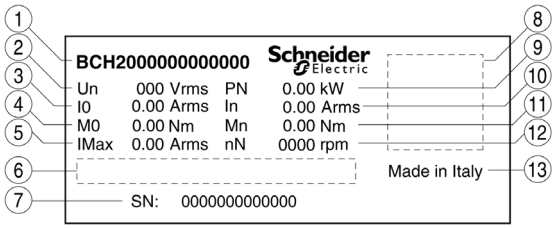

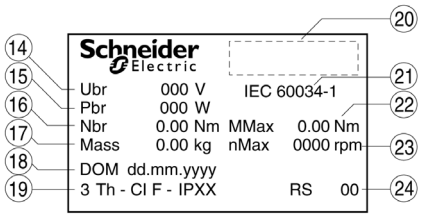

Item	Description	Item	Description
1	Motor reference *(see page 56)*	13	Country of manufacture
2	Nominal voltage	14	Nominal voltage of the holding brake (optional)
3	Continuous stall current	15	Nominal power of the holding brake (optional)
4	Continuous stall torque	16	Nominal torque of the holding brake (optional)
5	Maximum current	17	Mass
6	Barcode	18	Date of manufacture DOM
7	Serial number	19	Number of motor phases, temperature class, degree of protection
8	QR code	20	Certifications
9	Nominal power	21	Applied standard
10	Nominal current	22	Peak torque
11	Nominal torque	23	Maximum permissible speed of rotation
12	Nominal speed of rotation	24	Hardware version

BCH2•D, BCH2•F, BCH2•H, BCH2•M, and BCH2•R

The nameplate contains the following data:

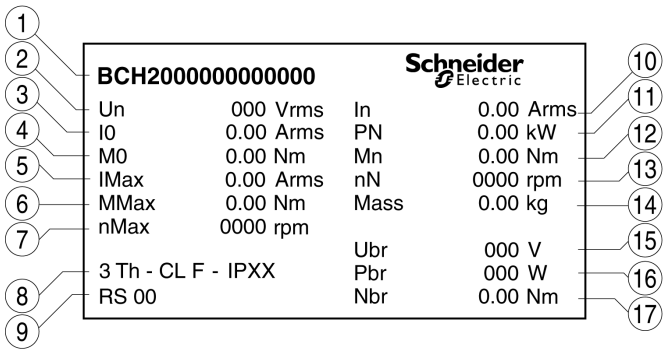

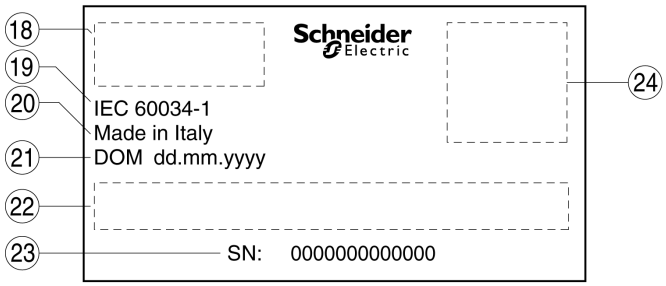

Item	Description	Item	Description
1	Motor reference *(see page 56)*	13	Nominal speed of rotation
2	Nominal voltage	14	Mass
3	Continuous stall current	15	Nominal voltage of the holding brake (optional)
4	Continuous stall torque	16	Nominal power of the holding brake (optional)
5	Maximum current	17	Nominal torque of the holding brake (optional)
6	Peak torque	18	Certifications
7	Maximum permissible speed of rotation	19	Applied standard
8	Number of motor phases, temperature class, degree of protection	20	Country of manufacture
9	Hardware version	21	Date of manufacture DOM
10	Nominal current	22	Barcode
11	Nominal power	23	Serial number
12	Nominal torque	24	QR code

Servo Motor Type Code

Servo Motor Type Code

Item	1	2	3	4	5	6	7	8	9	10
Type code (example)	BCH2	M	B	01	3	3	C	A	5	C

Item	Meaning	
1	**Product family** BCH2 = Brushless servo motors - second generation	
2	**Moment of inertia** L = Low M = Medium H = High	
3	**Size (housing)** B = 40 mm flange D = 60 mm flange F = 80 mm flange H = 100 mm flange M = 130 mm flange R = 180 mm flange	
4	**Nominal power** A5 = 50 W 01 = 100 W 02 = 200 W 03 = 300 W 04 = 400 W 05 = 500 W 06 = 600 W 07 = 750 W 08 = 850 W 09 = 900 W	10 = 1.0 kW 13 = 1.3 kW 15 = 1.5 kW 20 = 2.0 kW 30 = 3.0 kW 35 = 3.5 kW 45 = 4.5 kW
5	**Winding** 1 = Optimized in terms of torque (1000 rpm/1500 rpm) 2 = Optimized in terms of torque and speed of rotation (2000 rpm) 3 = Optimized in terms of speed of rotation (3000 rpm)	
6	**Shaft and degree of protection**(1) 0 = Smooth shaft; degree of protection: shaft IP 54, housing IP 65(2) 1 = Parallel key; degree of protection: shaft IP 54, housing IP 65(2) 2 = Smooth shaft; degree of protection: shaft and housing IP 65 3 = Parallel key; degree of protection: shaft and housing IP 65	
7	**Encoder system** C = High-resolution encoder single turn M = High-resolution encoder multi turn(3)	
8	**Holding brake** A = Without holding brake F = With holding brake	
9	**Connection version** 5 = Flying leads (for BCH2•B, BCH2•D, BCH2•F) 6 = MIL connector (for BCH2•H, BCH2•M, BCH2•R)	
10	**Mechanical interface - mounting** C = Asian style	

(1) In the case of mounting position IM V3 (drive shaft vertical, shaft end up), the motor has degree of protection IP 50.
(2) Only available with single turn encoder, up to 4.5 kW.
(3) Planned marketing end of November 2018.

Section 5.2
Motor Technical Data

What Is in This Section?

This section contains the following topics:

Topic	Page
Environmental Conditions	58
Tightening Torque and Property Class of Screws	59
Overload Characteristics Curves	59
Encoder Technical Data	60

Environmental Conditions

Ambient Conditions During Operation

The maximum permissible ambient temperature during operation depends on the mounting distances between the devices and on the required power. Observe the instructions in the chapter Installation *(see page 166)*.

Description	Unit	Value
Ambient temperature(1) for motors without holding brake (no icing, non-condensing).	°C (°F)	-20...40 (-4...104)
Ambient temperature for motors with holding brake (no icing, non-condensing).	°C (°F)	0...40 (32...104)
Ambient temperature with current derating of 1% per °C (per 1.8 °F)	°C (°F)	40...60 (104...140)
Relative humidity (non-condensing)	%	5...85
Class as per IEC 60721-3-3	-	3K3, 3Z12, 3Z2, 3B2, 3C1, 3M6(2)
Installation altitude above mean sea level without current derating	m (ft)	<1000 (<3281)
Installation altitude above mean sea level with current derating of 1% per 100 m at altitudes higher than 1000 m	m (ft)	1000...3000 (3281...9843)
(1) Limit values with flanged motor, see Flange Sizes for Limit Values *(see page 58)* **(2)** Tested as per IEC 60068-2-6 and IEC 60068-2-27		

Ambient Conditions During Transportation and Storage

The environment during transportation and storage must be dry and free from dust.

Description	Unit	Value
Temperature	°C (°F)	-40...70 (-40...158)
Relative humidity (non-condensing)	%	≤75
Set of class combinations as per IEC 60721-3-2	–	IE 21

Flange Sizes for Limit Values

Limit values referring to this table relate to flanged motors with the following flange sizes:

Motor	Flange material	Flange size in [mm (in)]
BCH2MB	Aluminum	185 x 185 x 8 (7.28 x 7.28 x 0.31)
BCH2LD	Aluminum	250 x 250 x 12 (9.84 x 9.84 x 0.47)
BCH2•F	Aluminum	250 x 250 x 12 (9.84 x 9.84 x 0.47)
BCH2LH	Steel	300 x 300 x 20 (11.8 x 11.8 x 0.79)
BCH2•M	Steel	400 x 400 x 20 (15.7 x 15.7 x 0.79)
BCH2•R	Steel	550 x 550 x 20 (21.7 x 21.7 x 0.79)

Compatibility with Foreign Substances

The motor has been tested for compatibility with many known substances and with the latest available knowledge at the moment of the design. Nonetheless, you must perform a compatibility test before using a foreign substance.

Tightening Torque and Property Class of Screws

Housing screws	Unit	Tightening torque
M3 x 0.50	Nm (lb.in)	1 (8.85)
M4 x 0.70	Nm (lb.in)	2.9 (25.67)
M5 x 0.80	Nm (lb.in)	5.9 (52.22)
M6 x 1.00	Nm (lb.in)	9.9 (87.62)
M7 x 1.25	Nm (lb.in)	24 (212.40)
M8 x 1.50	Nm (lb.in)	49 (433.65)
Property class of the screws	H	8.8

Overload Characteristics Curves

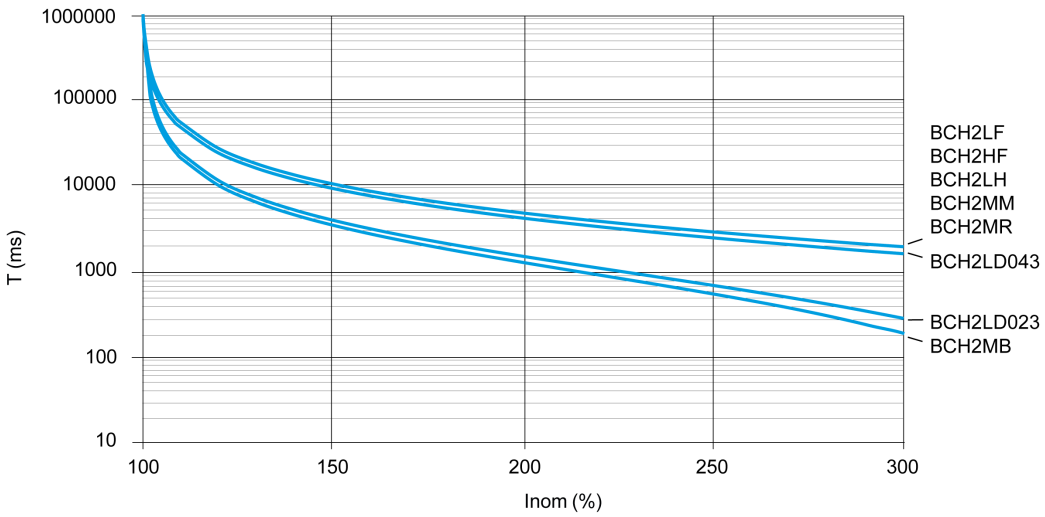

Encoder Technical Data

Overview

The drive can access the electronic nameplate via the electronic interface of the encoder for easy commissioning.

The signals meet the PELV requirements.

Depending on the motor reference, the motor are delivered with a single turn encoder or a multi turn encoder.

Single Turn Encoder

Technical data

Description	Value
Measuring range absolute	1 revolution
Resolution in increments	Depending on evaluation
Accuracy of position	±0.044°
Supply voltage	4.1...5.25 Vdc
Maximum supply current	100 mA
Maximum permissible speed of rotation	6000 rpm
Maximum angular acceleration	100,000 rad/s^2

Multi Turn Encoder

Technical data

Description	Value
Measuring range absolute	1 revolution
Resolution in increments	Depending on evaluation
Accuracy of position	±0.044°
Supply voltage	4.1...5.25 Vdc
Maximum supply current	40 µA
Maximum permissible speed of rotation	6000 rpm
Maximum angular acceleration	100,000 rad/s^2
Battery nominal voltage	3.6 Vdc
Battery nominal current consumption while the encoder is not powered by the drive	20 µA at standstill 40 µA with rotating shaft
Battery life time (at 25 °C)	7 years

The multi turn counting is preserved through power down by an external battery.

- For further information on the battery compartment connection, refer to the motor encoder connection *(see page 147)*.
- For further information on the battery replacement, refer to the maintenance of the motor *(see page 329)*.

Section 5.3
BCH2MB Motor

What Is in This Section?

This section contains the following topics:

Topic	Page
BCH2MB Dimensions	62
BCH2MB Characteristics Table	63
BCH2MB Curves	64

BCH2MB Dimensions

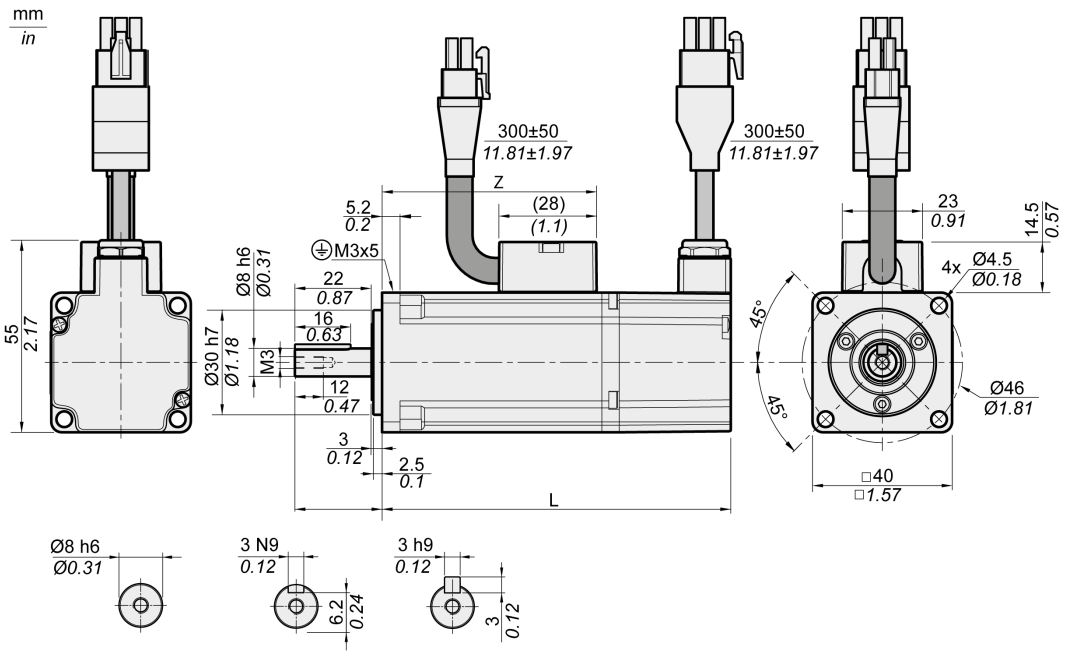

BCH2MB	Unit	A5	01
L (without holding brake)	mm (in)	82 (3.23)	100 (3.94)
L (with holding brake)	mm (in)	112 (4.41)	130 (5.12)
Z	mm (in)	43.5 (1.71)	61.5 (2.42)

BCH2MB Characteristics Table

BCH2MB(1)				A53	013
Technical data - general					
Continuous stall torque(2)		M_0	Nm	0.16	0.32
Peak torque		M_{max}	Nm	0.48	0.96
With supply voltage U_n = 230 Vac					
Nominal speed of rotation		n_N	rpm	3000	3000
Nominal torque		M_N	Nm	0.16	0.32
Nominal Current		I_N	A_{rms}	0.59	0.89
Nominal power		P_N	kW	0.05	0.10
Technical data - electrical					
Maximum winding voltage		U_{max}	Vac	255	255
Maximum winding voltage		U_{max}	Vdc	360	360
Maximum voltage to ground		–	Vac	255	255
Maximum Current		I_{max}	A_{rms}	1.8	2.7
Continuous stall current		I_0	A_{rms}	0.54	0.81
Voltage constant(3)		k_Eu-v	V_{rms}	18	24
Torque constant(4)		k_t	Nm/A	0.30	0.40
Winding resistance		R_{20}u-v	Ω	31.0	23.4
Winding inductance		L_qu-v	mH	26.4	21.5
Winding inductance		L_du-v	mH	24.7	20.6
Technical data - mechanical					
Maximum permissible speed of rotation		n_{max}	rpm	5000	5000
Rotor inertia without brake	Hardware version RS 01 or RS 2	J_M	$kgcm^2$	0.054	0.075
	Hardware version RS 03			0.044	0.065
Rotor inertia with brake	Hardware version RS 01 or RS 2	J_M	$kgcm^2$	0.055	0.076
	Hardware version RS 03			0.045	0.066
Mass without brake		m	kg	0.40	0.56
Mass with brake		m	kg	0.60	0.77
Degree of protection of the shaft		–	–	IP 65	IP 65
Degree of protection of the housing		–	–	IP 65	IP 65
Technical data - holding brake					
Holding torque		–	Nm	0.32	0.32
Nominal voltage		–	Vdc	24 +/-10%	24 +/-10%
Nominal power (electrical pull-in power)		–	W	4.4	4.4

(1) Limit values with flanged motor:
- Flange material: Aluminum
- Flange size in mm (in): 185 x 185 x 8 (7.28 x 7.28 x 0.31)

(2) M_0 = Continuous stall torque at 20 rpm and 100 % duty cycle; at speeds of rotation of <20 rpm the continuous stall torque is reduced to 87 %.
(3) RMS value at 1000 rpm and 20 °C (68 °F).
(4) At n = 20 rpm and 20 °C (68 °F).

BCH2MB Curves

BCH2MBA53 + LXM28EUA5	
Without shaft sealing ring	With shaft sealing ring
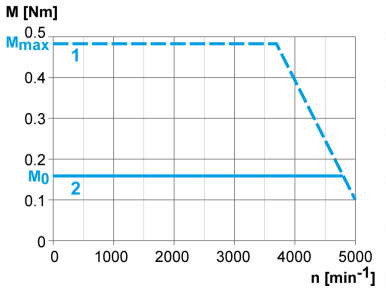	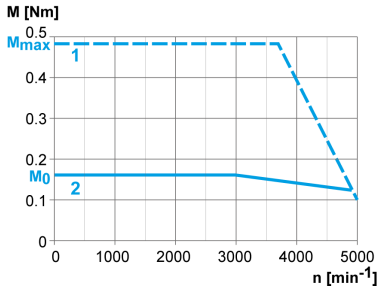
(1) Peak torque (2) Continuous torque	

BCH2MB013 + LXM28EU01	
Without shaft sealing ring	With shaft sealing ring
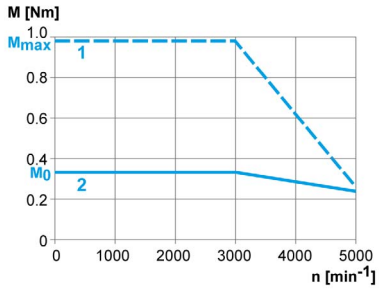	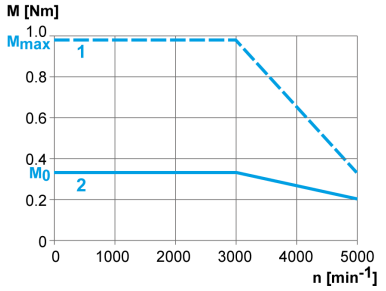
(1) Peak torque (2) Continuous torque	

Section 5.4
BCH2LD Motor

What Is in This Section?

This section contains the following topics:

Topic	Page
BCH2LD Dimensions	66
BCH2LD Characteristics Table	67
BCH2LD Curves	68

BCH2LD Dimensions

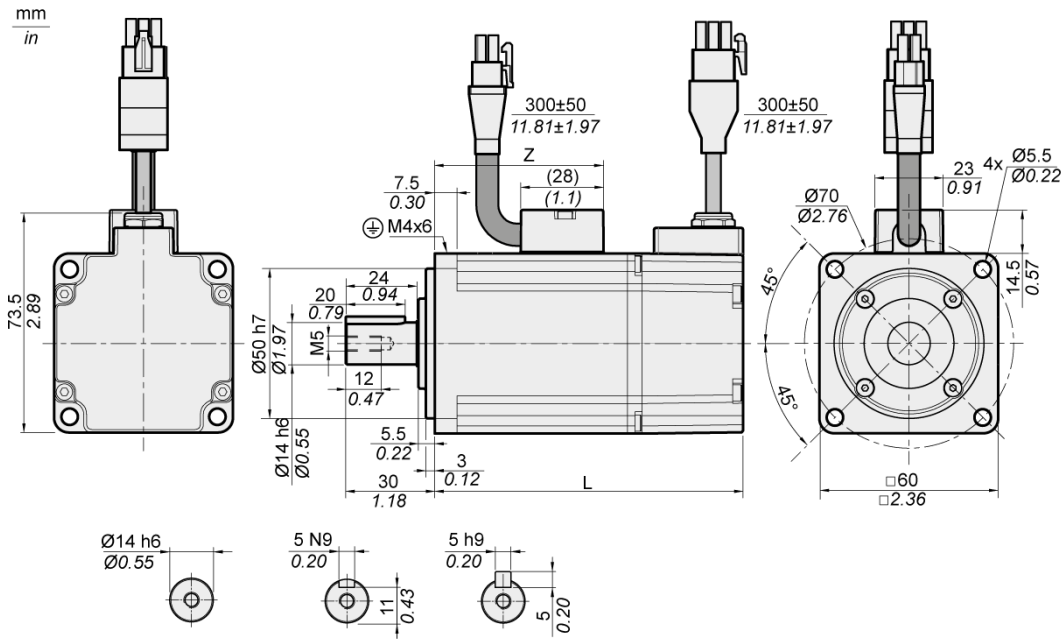

BCH2LD	Unit	02	04
L (without holding brake)	mm (in)	104 (4.09)	129 (5.08)
L (with holding brake)	mm (in)	140 (5.51)	165 (6.5)
Z	mm (in)	57 (2.24)	82 (3.23)

BCH2LD Characteristics Table

BCH2LD(1)			023	043
Technical data - general				
Continuous stall torque(2)	M_0	Nm	0.64	1.27
Peak torque	M_{max}	Nm	1.92	3.81
With supply voltage U_n = 230 Vac				
Nominal speed of rotation	n_N	rpm	3000	3000
Nominal torque	M_N	Nm	0.64	1.27
Nominal Current	I_N	A_{rms}	1.30	2.50
Nominal power	P_N	kW	0.20	0.40
Technical data - electrical				
Maximum winding voltage	U_{max}	Vac	255	255
Maximum winding voltage	U_{max}	Vdc	360	360
Maximum voltage to ground	–	Vac	255	255
Maximum Current	I_{max}	A_{rms}	4.5	7.8
Continuous stall current	I_0	A_{rms}	1.11	2.19
Voltage constant(3)	k_Eu-v	V_{rms}	35	35
Torque constant(4)	k_t	Nm/A	0.58	0.58
Winding resistance	R_{20}u-v	Ω	12.2	5.2
Winding inductance	L_qu-v	mH	24.8	12.5
Winding inductance	L_du-v	mH	22.7	12.0
Technical data - mechanical				
Maximum permissible speed of rotation	n_{max}	rpm	5000	5000
Rotor inertia without brake	J_M	$kgcm^2$	0.15	0.26
Rotor inertia with brake	J_M	$kgcm^2$	0.16	0.27
Mass without brake	m	kg	1.02	1.45
Mass with brake	m	kg	1.50	2.00
Degree of protection of the shaft	–	–	IP 65	IP 65
Degree of protection of the housing	–	–	IP 65	IP 65
Technical data - holding brake				
Holding torque	–	Nm	1.3	1.3
Nominal voltage	–	Vdc	24 +/-10%	24 +/-10%
Nominal power (electrical pull-in power)	–	W	11.2	11.2

(1) Limit values with flanged motor:
- Flange material: Aluminum
- Flange size in mm (in): 250 x 250 x 12 (9.84 x 9.84 x 0.47)

(2) M_0=Continuous stall torque at 20 rpm and 100 % duty cycle; at speeds of rotation of <20 rpm the continuous stall torque is reduced to 87 %
(3) RMS value at 1000 rpm and 20 °C (68 °F).
(4) At n = 20 rpm and 20 °C (68 °F).

BCH2LD Curves

BCH2LD023 + LXM28EU02	BCH2LD043 + LXM28EU04
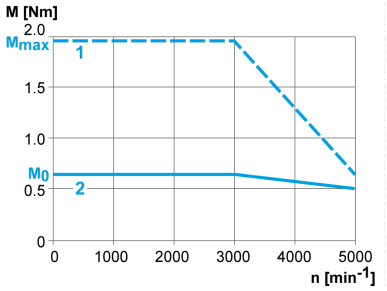	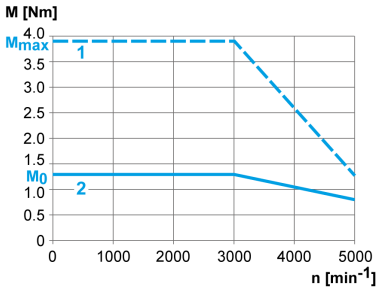
(1) Peak torque (2) Continuous torque	

Section 5.5
BCH2•F Motor

What Is in This Section?

This section contains the following topics:

Topic	Page
BCH2•F Dimensions	70
BCH2•F Characteristics Table	71
BCH2•F Curves	72

BCH2•F Dimensions

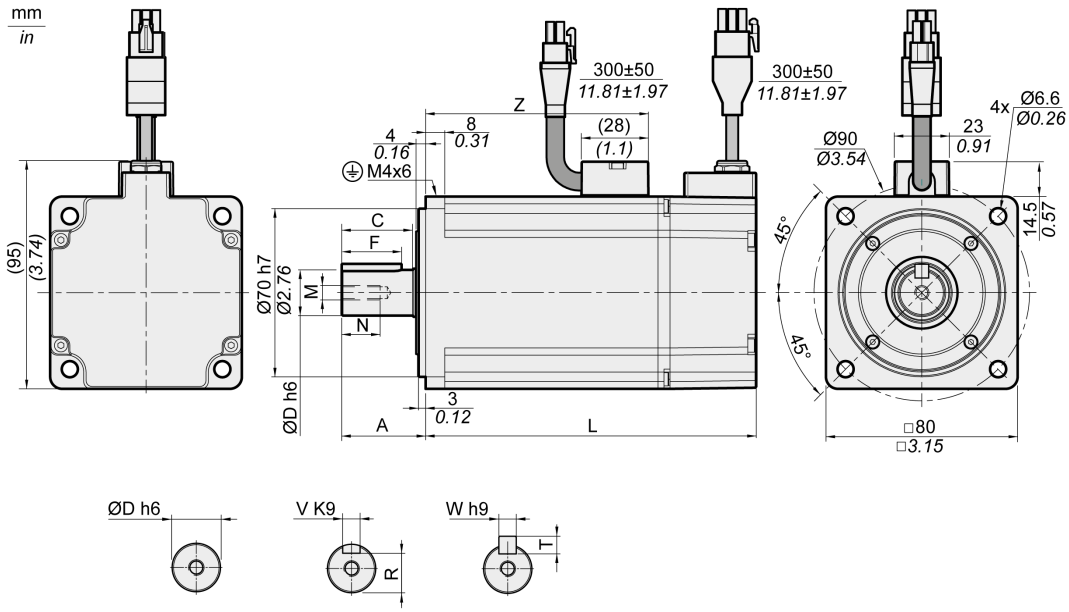

BCH2	Unit	LF04	HF07	LF07
L (without holding brake)	mm (in)	112 (4.41)	138 (5.43)	138 (5.43)
L (with holding brake)	mm (in)	152 (5.98)	178 (7.01)	178 (7.01)
A	mm (in)	30 (1.18)	35 (1.38)	35 (1.38)
C	mm (in)	24.5 (0.96)	29.5 (1.16)	29.5 (1.16)
D	mm (in)	14 (0.55)	19 (0.75)	19 (0.75)
F	mm (in)	20 (0.79)	25 (0.98)	25 (0.98)
M	-	M5	M6	M6
N	mm (in)	12 (0.47)	16 (0.63)	16 (0.63)
R	mm (in)	11 (0.43)	15.5 (0.61)	15.5 (0.61)
T	mm (in)	5 (0.2)	6 (0.24)	6 (0.24)
V	mm (in)	5 (0.2)	6 (0.24)	6 (0.24)
W	mm (in)	5 (0.2)	6 (0.24)	6 (0.24)
Z	mm (in)	68 (2.68)	93 (3.66)	93 (3.66)

BCH2•F Characteristics Table

BCH2[1]			LF043	HF073	LF073
Technical data - general					
Continuous stall torque[2]	M_0	Nm	1.27	2.39	2.39
Peak torque	M_{max}	Nm	3.81	7.16	7.16
With supply voltage U_n = 230 Vac					
Nominal speed of rotation	n_N	rpm	3000	3000	3000
Nominal torque	M_N	Nm	1.27	2.39	2.39
Nominal Current	I_N	A_{rms}	2.52	4.29	4.29
Nominal power	P_N	kW	0.40	0.75	0.75
Technical data - electrical					
Maximum winding voltage	U_{max}	Vac	255	255	255
Maximum winding voltage	U_{max}	Vdc	360	360	360
Maximum voltage to ground	–	Vac	255	255	255
Maximum Current	I_{max}	A_{rms}	7.8	13.5	13.5
Continuous stall current	I_0	A_{rms}	2.29	4.01	4.01
Voltage constant[3]	k_Eu-v	V_{rms}	33.5	36	36
Torque constant[4]	k_t	Nm/A	0.55	0.60	0.60
Winding resistance	R_{20}u-v	Ω	3.20	1.50	1.50
Winding inductance	L_qu-v	mH	12.0	6.6	6.6
Winding inductance	L_du-v	mH	11.3	6.1	6.1
Technical data - mechanical					
Maximum permissible speed of rotation	n_{max}	rpm	5000	5000	5000
Rotor inertia without brake	J_M	$kgcm^2$	0.66	1.53	1.18
Rotor inertia with brake	J_M	$kgcm^2$	0.71	1.58	1.23
Mass without brake	m	kg	2.00	2.90	2.80
Mass with brake	m	kg	2.80	3.70	3.60
Degree of protection of the shaft	–	–	IP 65	IP 65	IP 65
Degree of protection of the housing	–	–	IP 65	IP 65	IP 65
Technical data - holding brake					
Holding torque	–	Nm	2.5	2.5	2.5
Nominal voltage	–	Vdc	24 +/-10%	24 +/-10%	24 +/-10%
Nominal power (electrical pull-in power)	–	W	10.2	10.2	10.2

(1) Limit values with flanged motor:
- Flange material: Aluminum
- Flange size in mm (in): 250 x 250 x 12 (9.84 x 9.84 x 0.47)

(2) M_0=Continuous stall torque at 20 rpm and 100 % duty cycle; at speeds of rotation of <20 rpm the continuous stall torque is reduced to 87 %
(3) RMS value at 1000 rpm and 20 °C (68 °F).
(4) At n = 20 rpm and 20 °C (68 °F).

BCH2•F Curves

BCH2LF043 + LXM28EU04
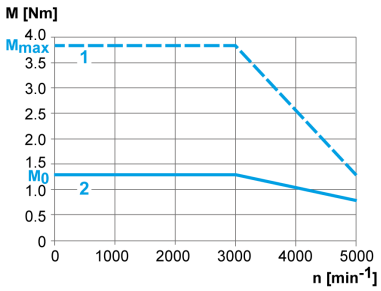
(1) Peak torque (2) Continuous torque

BCH2HF073 + LXM28EU07	BCH2LF073 + LXM28EU07
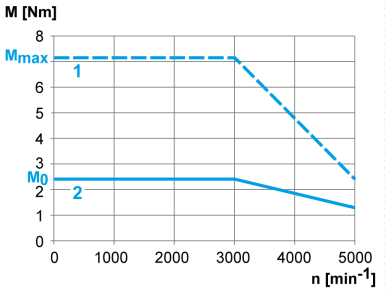	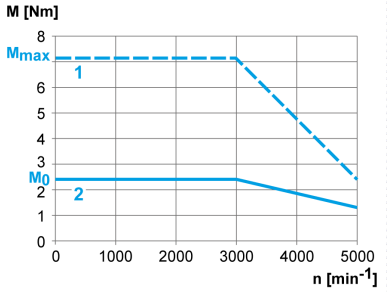
(1) Peak torque (2) Continuous torque	

Section 5.6
BCH2LH Motor

What Is in This Section?

This section contains the following topics:

Topic	Page
BCH2LH Dimensions	74
BCH2LH Characteristics Table	75
BCH2LH Curves	76

BCH2LH Dimensions

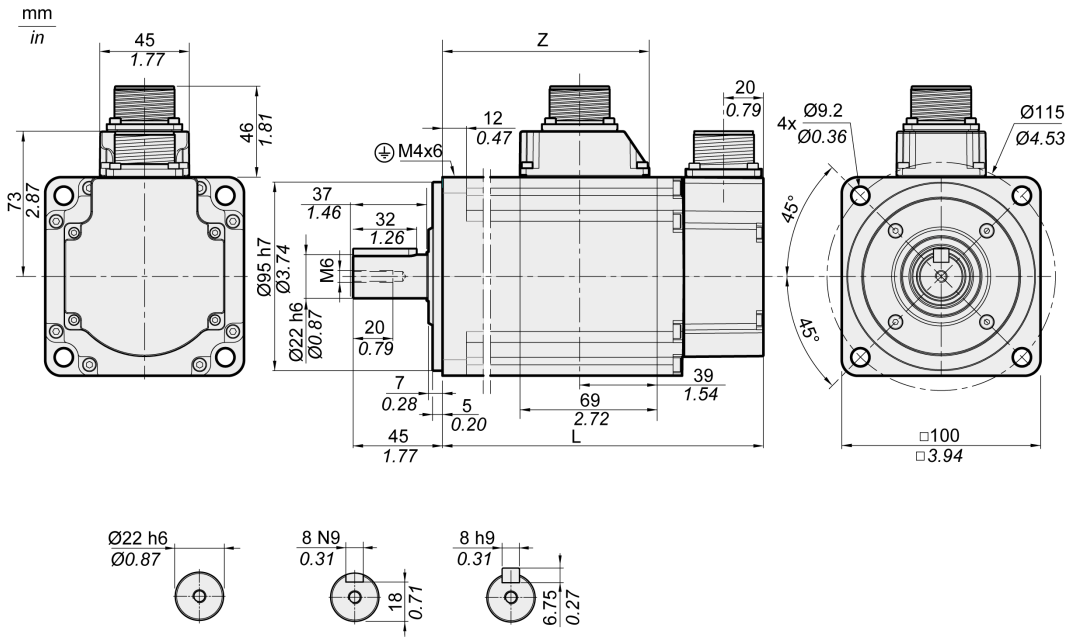

BCH2LH	Unit	103	203
L (without holding brake)	mm (in)	153.5 (6.04)	198.5 (7.81)
L (with holding brake)	mm (in)	180.5 (7.11)	225.5 (8.88)
Z	mm (in)	96 (3.78)	141 (5.55)

BCH2LH Characteristics Table

BCH2LH(1)			103	203
Technical data - general				
Continuous stall torque(2)	M_0	Nm	3.18	6.37
Peak torque	M_{max}	Nm	9.54	19.11
With supply voltage U_n = 230 Vac				
Nominal speed of rotation	n_N	rpm	3000	3000
Nominal torque	M_N	Nm	3.18	6.37
Nominal Current	I_N	A_{rms}	6.64	10.27
Nominal power	P_N	kW	1.00	2.00
Technical data - electrical				
Maximum winding voltage	U_{max}	Vac	255	255
Maximum winding voltage	U_{max}	Vdc	360	360
Maximum voltage to ground	–	Vac	255	255
Maximum Current	I_{max}	A_{rms}	20.0	35.0
Continuous stall current	I_0	A_{rms}	5.83	9.87
Voltage constant(3)	k_Eu-v	V_{rms}	33	39
Torque constant(4)	k_t	Nm/A	0.55	0.65
Winding resistance	R_{20}u-v	Ω	0.67	0.36
Winding inductance	L_qu-v	mH	4.3	2.6
Winding inductance	L_du-v	mH	4.20	2.59
Technical data - mechanical				
Maximum permissible speed of rotation	n_{max}	rpm	5000	5000
Rotor inertia without brake	J_M	$kgcm^2$	2.39	4.27
Rotor inertia with brake	J_M	$kgcm^2$	2.44	4.34
Mass without brake	m	kg	4.60	6.70
Mass with brake	m	kg	5.10	7.20
Degree of protection of the shaft	–	–	IP 65	IP 65
Degree of protection of the housing	–	–	IP 65	IP 65
Technical data - holding brake				
Holding torque	–	Nm	6.5	6.5
Nominal voltage	–	Vdc	24 +/-10%	24 +/-10%
Nominal power (electrical pull-in power)	–	W	10.4	10.4

(1) Limit values with flanged motor:
- Flange material: Steel
- Flange size in mm (in): 300 x 300 x 20 (11.8 x 11.8 x 0.79)

(2) M_0=Continuous stall torque at 20 rpm and 100 % duty cycle; at speeds of rotation of <20 rpm the continuous stall torque is reduced to 87 %
(3) RMS value at 1000 rpm and 20 °C (68 °F).
(4) At n = 20 rpm and 20 °C (68 °F).

BCH2LH Curves

BCH2LH103 + LXM28EU10	BCH2LH203 + LXM28EU20
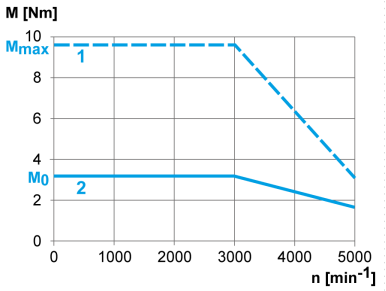	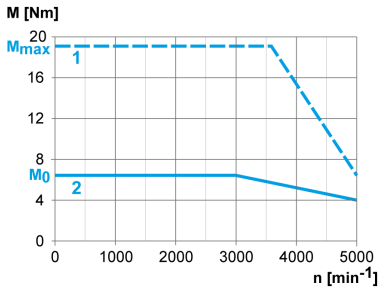
(1) Peak torque (2) Continuous torque	

Section 5.7
BCH2•M Motor

What Is in This Section?

This section contains the following topics:

Topic	Page
BCH2•M Dimensions	78
BCH2•M Characteristics Table	79
BCH2•M Curves	81

BCH2•M Dimensions

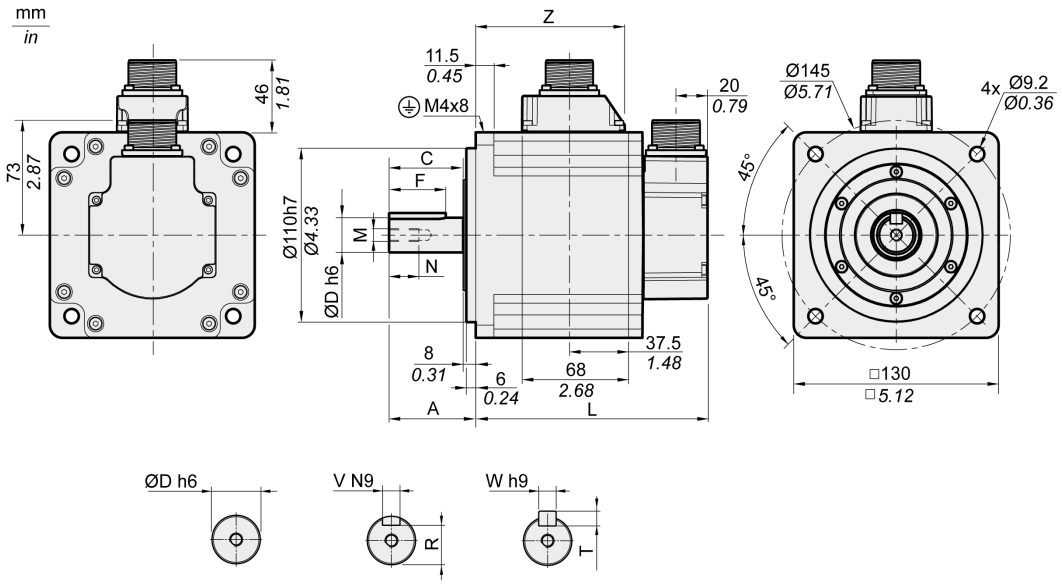

BCH2•M	Unit	08	03, 05, 06, 10	09, 15	20
L (without holding brake)	mm (in)	187 (7.36)	147 (5.79)	163 (6.42)	187 (7.36)
L (with holding brake)	mm (in)	216 (8.5)	176 (6.93)	192 (7.56)	216 (8.5)
A	mm (in)	48 (1.89)	55 (2.17)	55 (2.17)	55 (2.17)
C	mm (in)	40 (1.57)	47 (1.85)	47 (1.85)	47 (1.85)
D	mm (in)	19 (0.75)	22 (0.87)	22 (0.87)	22 (0.87)
F	mm (in)	25 (0.98)	36 (1.42)	36 (1.42)	36 (1.42)
M	-	M6	M8	M8	M8
N	mm (in)	16 (0.63)	19 (0.75)	19 (0.75)	19 (0.75)
R	mm (in)	15.5 (0.61)	18 (0.71)	18 (0.71)	18 (0.71)
T	mm (in)	6 (0.24)	7 (0.28)	7 (0.28)	7 (0.28)
V	mm (in)	6 (0.24)	8 (0.31)	8 (0.31)	8 (0.31)
W	mm (in)	6 (0.24)	8 (0.31)	8 (0.31)	8 (0.31)
Z	mm (in)	134.5 (5.30)	94.5 (3.72)	110.5 (4.35)	134.5 (5.30)

BCH2•M Characteristics Table

BCH2[1]			MM052	MM031	MM102	HM102	MM081
Technical data - general							
Continuous stall torque[2]	M_0	Nm	2.39	2.86	4.77	4.77	5.39
Peak torque	M_{max}	Nm	7.16	8.59	14.30	14.30	13.80
With supply voltage U_n = 230 Vac							
Nominal speed of rotation	n_N	rpm	2000	1000	2000	2000	1500
Nominal torque	M_N	Nm	2.39	2.86	4.77	4.77	5.39
Nominal Current	I_N	A_{rms}	3.24	2.09	6.29	6.29	6.29
Nominal power	P_N	kW	0.50	0.30	1.00	1.00	0.85
Technical data - electrical							
Maximum winding voltage	U_{max}	Vac	255	255	255	255	255
Maximum winding voltage	U_{max}	Vdc	360	360	360	360	360
Maximum voltage to ground	–	Vac	255	255	255	255	255
Maximum Current	I_{max}	A_{rms}	9.5	6.0	20.0	20.0	15.0
Continuous stall current	I_0	A_{rms}	2.89	1.88	5.77	5.77	5.62
Voltage constant[3]	k_Eu-v	V_{rms}	50	92	50	50	58
Torque constant[4]	k_t	Nm/A	0.83	1.52	0.83	0.83	0.96
Winding resistance	R_{20}u-v	Ω	0.74	2.08	0.74	0.74	0.42
Winding inductance	L_qu-v	mH	7.84	26.25	7.84	7.84	4.70
Winding inductance	L_du-v	mH	7.14	23.91	7.14	7.14	4.30
Technical data - mechanical							
Maximum permissible speed of rotation	n_{max}	rpm	3000	2000	3000	3000	3000
Rotor inertia without brake	J_M	$kgcm^2$	6.62	6.62	6.62	8.40	13.49
Rotor inertia with brake	J_M	$kgcm^2$	6.90	6.90	6.90	8.79	14.09
Mass without brake	m	kg	7.00	7.00	7.00	7.10	9.60
Mass with brake	m	kg	8.20	8.20	8.20	8.30	10.90
Degree of protection of the shaft	–	–	IP 65	IP 54	IP 65	IP 65	IP 54
Degree of protection of the housing	–	–	IP 65	IP 65	IP 65	IP 65	IP 65
Technical data - holding brake							
Holding torque	–	Nm	9.6	9.6	9.6	9.6	9.6
Nominal voltage	–	Vdc	24 +/-10%	24 +/-10%	24 +/-10%	24 +/-10%	24 +/-10%
Nominal power (electrical pull-in power)	–	W	19.7	19.7	19.7	19.7	19.7

(1) Limit values with flanged motor:
- Flange material: Steel
- Flange size in mm (in): 400 x 400 x 20 (15.7 x 15.7 x 0.79)

(2) M_0=Continuous stall torque at 20 rpm and 100 % duty cycle; at speeds of rotation of <20 rpm the continuous stall torque is reduced to 87 %
(3) RMS value at 1000 rpm and 20 °C (68 °F).
(4) At n = 20 rpm and 20 °C (68 °F).

BCH2(1)			MM061	MM091	MM152	MM202
Technical data - general						
Continuous stall torque(2)	M_0	Nm	5.73	8.59	7.16	9.55
Peak torque	M_{max}	Nm	17.19	25.77	21.48	28.65
With supply voltage U_n = 230 Vac						
Nominal speed of rotation	n_N	rpm	1000	1000	2000	2000
Nominal torque	M_N	Nm	5.73	8.59	7.16	9.55
Nominal Current	I_N	A_{rms}	4.10	6.15	6.74	11.25
Nominal power	P_N	kW	0.60	0.90	1.50	2.00
Technical data - electrical						
Maximum winding voltage	U_{max}	Vac	255	255	255	255
Maximum winding voltage	U_{max}	Vdc	360	360	360	360
Maximum voltage to ground	–	Vac	255	255	255	255
Maximum Current	I_{max}	A_{rms}	13.5	20.0	21.0	33.0
Continuous stall current	I_0	A_{rms}	3.77	5.64	6.18	9.95
Voltage constant(3)	k_Eu-v	V_{rms}	92	92	70	58
Torque constant(4)	k_t	Nm/A	1.52	1.52	1.16	0.96
Winding resistance	R_{20}u-v	Ω	2.08	1.22	0.64	0.42
Winding inductance	L_qu-v	mH	26.25	16.40	7.20	4.70
Winding inductance	L_du-v	mH	23.91	14.90	6.40	4.30
Technical data - mechanical						
Maximum permissible speed of rotation	n_{max}	rpm	2000	2000	3000	3000
Rotor inertia without brake	J_M	$kgcm^2$	6.62	9.69	9.69	13.49
Rotor inertia with brake	J_M	$kgcm^2$	6.90	9.99	9.99	14.09
Mass without brake	m	kg	7.00	7.60	7.60	9.70
Mass with brake	m	kg	8.20	8.80	8.80	11.00
Technical data - holding brake						
Holding torque	–	Nm	9.6	9.6	9.6	9.6
Nominal voltage	–	Vdc	24 +/-10%	24 +/-10%	24 +/-10%	24 +/-10%
Nominal power (electrical pull-in power)	–	W	19.7	19.7	19.7	19.7

(1) Limit values with flanged motor:
- Flange material: Steel
- Flange size in mm (in): 400 x 400 x 20 (15.7 x 15.7 x 0.79)

(2) M_0=Continuous stall torque at 20 rpm and 100 % duty cycle; at speeds of rotation of <20 rpm the continuous stall torque is reduced to 87 %
(3) RMS value at 1000 rpm and 20 °C (68 °F).
(4) At n = 20 rpm and 20 °C (68 °F).

BCH2•M Curves

BCH2MM052 + LXM28EU07	BCH2MM031 + LXM28EU04
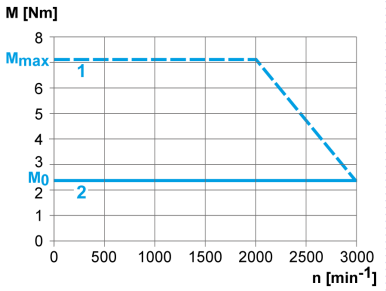	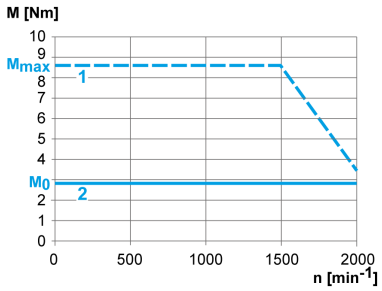
(1) Peak torque (2) Continuous torque	

BCH2MM102 + LXM28EU10	BCH2HM102 + LXM28EU10
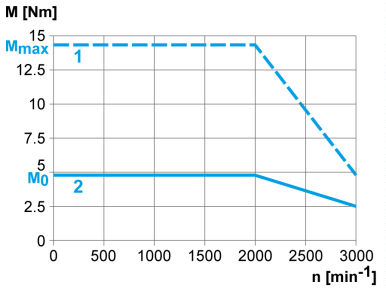	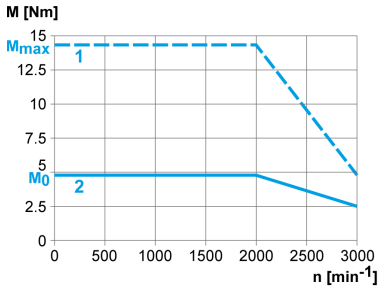
(1) Peak torque (2) Continuous torque	

BCH2MM081 + LXM28EU10	BCH2MM061 + LXM28EU07
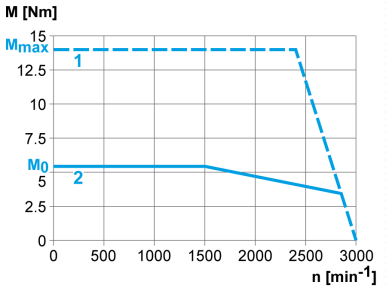	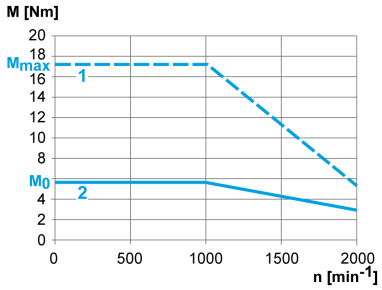
(1) Peak torque (2) Continuous torque	

BCH2MM091 + LXM28EU10	BCH2MM152 + LXM28EU15
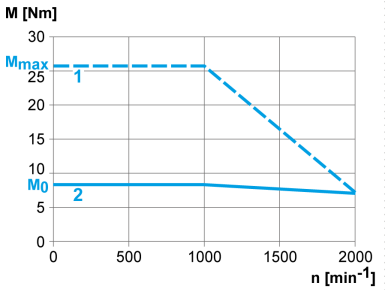	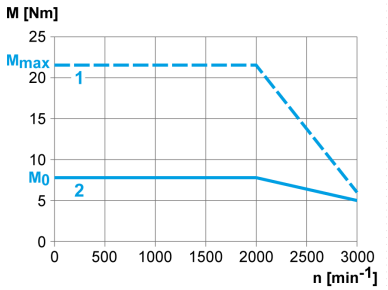
(1) Peak torque (2) Continuous torque	

BCH2MM202 + LXM28EU20
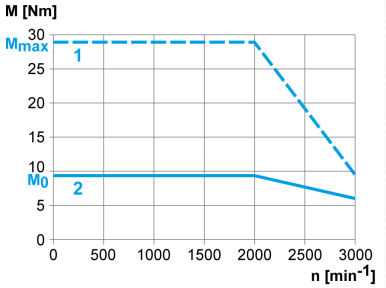
(1) Peak torque (2) Continuous torque

Section 5.8
BCH2•R Motor

What Is in This Section?

This section contains the following topics:

Topic	Page
BCH2•R Dimensions	84
BCH2•R Characteristics Table	85
BCH2•R Curves	87

BCH2•R Dimensions

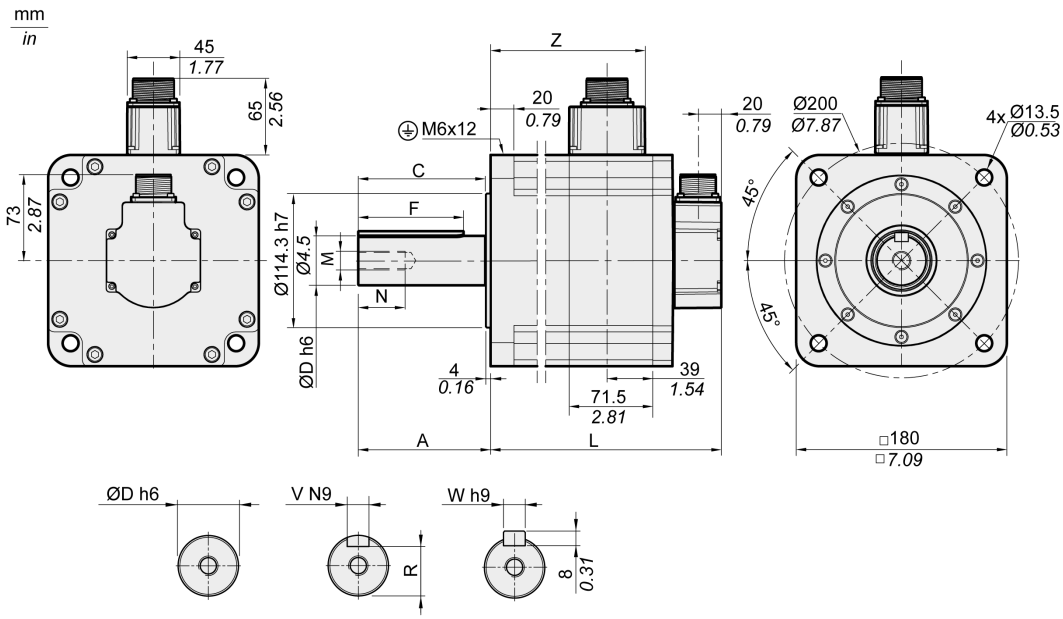

BCH2•R	Unit	20	30, 35	45
L (without holding brake)	mm (in)	168 (6.61)	201 (7.91)	234 (9.21)
L (with holding brake)	mm (in)	203 (7.99)	236 (9.29)	269 (10.59)
A	mm (in)	79 (3.11)		
C	mm (in)	73 (2.87)		
D	mm (in)	35 (1.38)		
F	mm (in)	63 (2.48)		
M	-	M12		
N	mm (in)	28 (1.10)		
R	mm (in)	30 (1.18)		
V	mm (in)	10 (0.39)		
W	mm (in)	10 (0.39)		
Z	mm (in)	103 (4.06)	136 (5.35)	169 (6.65)

BCH2•R Characteristics Table

BCH2MR202/301/302, BCH2HR202 technical data

BCH2(1)			MR202	HR202	MR302	MR301
Technical data - general						
Continuous stall torque(2)	M_0	Nm	9.55	9.55	14.32	19.10
Peak torque	M_{max}	Nm	28.65	28.65	42.97	57.29
With supply voltage U_n = 230 Vac						
Nominal speed of rotation	n_N	rpm	2000	2000	2000	1500
Nominal torque	M_N	Nm	9.55	9.55	14.32	19.10
Nominal Current	I_N	A_{rms}	9.6	9.6	18.8	18.8
Nominal power	P_N	kW	2.00	2.00	3.00	3.00
Technical data - electrical						
Maximum winding voltage	U_{max}	Vac	255	255	255	255
Maximum winding voltage	U_{max}	Vdc	360	360	360	360
Maximum voltage to ground	–	Vac	255	255	255	255
Maximum Current	I_{max}	A_{rms}	35.5	35.5	56.0	61.0
Continuous stall current	I_0	A_{rms}	8.75	8.75	16.33	16.49
Voltage constant(3)	k_Eu-v	V_{rms}	66	66	53	70
Torque constant(4)	k_t	Nm/A	1.09	1.09	0.88	1.16
Winding resistance	R_{20}u-v	Ω	0.572	0.572	0.168	0.234
Winding inductance	L_qu-v	mH	6.70	6.70	2.88	3.78
Winding inductance	L_du-v	mH	6.10	6.10	2.71	3.45
Technical data - mechanical						
Maximum permissible speed of rotation	n_{max}	rpm	3000	3000	3000	3000
Rotor inertia without brake	J_M	$kgcm^2$	26.49	34.67	53.55	53.55
Rotor inertia with brake	J_M	$kgcm^2$	26.99	36.17	54.09	54.09
Mass without brake	m	kg	13.00	14.30	18.50	18.50
Mass with brake	m	kg	18.00	19.30	23.00	23.00
Degree of protection of the shaft	–	–	IP 65	IP 65	IP 65	IP 54
Degree of protection of the housing	–	–	IP 65	IP 65	IP 65	IP 65
Technical data - holding brake						
Holding torque	–	Nm	48	48	48	48
Nominal voltage	–	Vdc	24 +/-10%	24 +/-10%	24 +/-10%	24 +/-10%
Nominal power (electrical pull-in power)	–	W	49.6	49.6	49.6	49.6

(1) Limit values with flanged motor:
- Flange material: Steel
- Flange size in mm (in): 550 x 550 x 20 (21.7 x 21.7 x 0.79)

(2) M_0=Continuous stall torque at 20 rpm and 100 % duty cycle; at speeds of rotation of <20 rpm the continuous stall torque is reduced to 87 %
(3) RMS value at 1000 rpm and 20 °C (68 °F).
(4) At n = 20 rpm and 20 °C (68 °F).

BCH2MR352/451 technical data

BCH2[1]			MR352	MR451
Technical data - general				
Continuous stall torque[2]	M_0	Nm	16.70	28.65
Peak torque	M_{max}	Nm	50.30	71.62
With supply voltage U_n = 230 Vac				
Nominal speed of rotation	n_N	rpm	2000	1500
Nominal torque	M_N	Nm	16.70	28.65
Nominal Current	I_N	A_{rms}	19.3	22.8
Nominal power	P_N	kW	3.50	4.50
Technical data - electrical				
Maximum winding voltage	U_{max}	Vac	255	255
Maximum winding voltage	U_{max}	Vdc	360	360
Maximum voltage to ground	–	Vac	255	255
Maximum Current	I_{max}	A_{rms}	61.0	61.0
Continuous stall current	I_0	A_{rms}	16.83	19.68
Voltage constant[3]	k_Eu-v	V_{rms}	60	88
Torque constant[4]	k_t	Nm/A	0.99	1.46
Winding resistance	R_{20}u-v	Ω	0.168	0.199
Winding inductance	L_qu-v	mH	2.80	4.00
Winding inductance	L_du-v	mH	2.57	3.80
Technical data - mechanical				
Maximum permissible speed of rotation	n_{max}	rpm	3000	3000
Rotor inertia without brake	J_M	$kgcm^2$	53.55	73.31
Rotor inertia with brake	J_M	$kgcm^2$	54.09	72.99
Mass without brake	m	kg	18.50	23.64
Mass with brake	m	kg	23.00	28.00
Technical data - holding brake				
Holding torque	–	Nm	48	48
Nominal voltage	–	Vdc	24 +/-10%	24 +/-10%
Nominal power (electrical pull-in power)	–	W	49.6	49.6

(1) Limit values with flanged motor:
- Flange material: Steel
- Flange size in mm (in): 550 x 550 x 20 (21.7 x 21.7 x 0.79)

(2) M_0=Continuous stall torque at 20 rpm and 100 % duty cycle; at speeds of rotation of <20 rpm the continuous stall torque is reduced to 87 %
(3) RMS value at 1000 rpm and 20 °C (68 °F).
(4) At n = 20 rpm and 20 °C (68 °F).

BCH2•R Curves

BCH2MR202 + LXM28EU20	BCH2HR202 + LXM28EU20
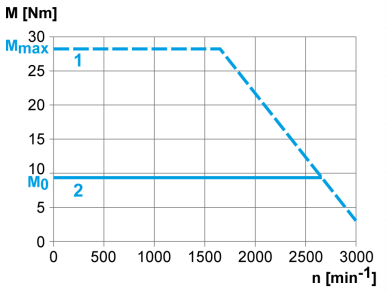	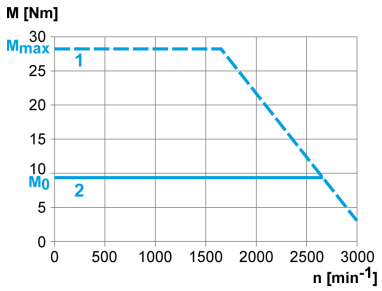
(1) Peak torque (2) Continuous torque	

BCH2MR302 + LXM28EU30	BCH2MR301 + LXM28EU30
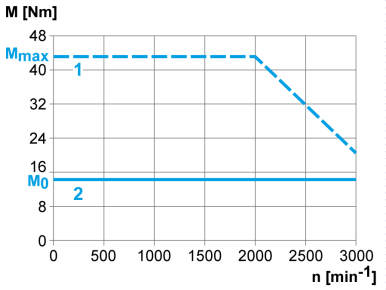	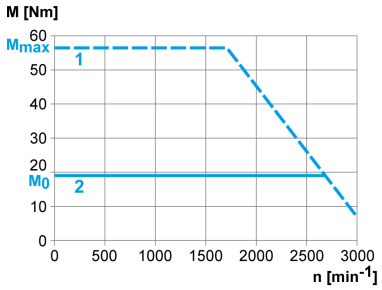
(1) Peak torque (2) Continuous torque	

BCH2MR352 + LXM28EU45	BCH2MR451 + LXM28EU45
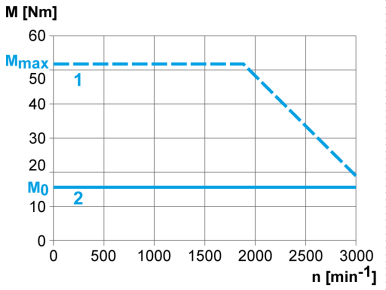	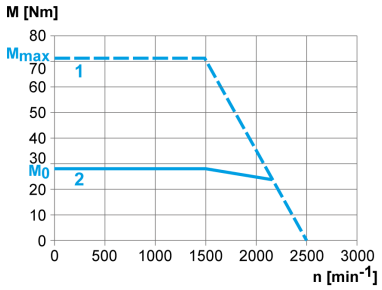
(1) Peak torque (2) Continuous torque	

Chapter 6
Accessories and Spare Parts

What Is in This Chapter?

This chapter contains the following topics:

Topic	Page
Commissioning Tools	90
Connectors and Adapters	90
External Mains Filters	90
DC Bus Accessories	91
Application Nameplate	91
Ethernet Shielded Twisted-pair Cables	92
Motor Cables	93
Encoder Cables and Accessories	93
Signal Cables	93
Signal Cable for Safety Function STO	94
External Braking Resistors and Holding Brake Controller	94
Circuit Breakers	94
Motor Protection Switches and Power Contactors	95

Commissioning Tools

Description	Reference
Commissioning software LXM28 DTM Library, can be downloaded at: *www.schneider-electric.com*	-
ESI Description file, can be downloaded at: *www.schneider-electric.com*	-
PC connection kit, serial connection between drive and PC, USB-A to RJ45	TCSMCNAM3M002P
Multi-Loader, device for copying the parameter settings to a PC or to another drive	VW3A8121
Connection cable for Multi-Loader	VW3A8126
Modbus cable, 1 m (3.28 ft), 2 x RJ45	VW3A8306R10

Connectors and Adapters

Description			Reference
Connector kit for logic supply and power stage supply (CN5), braking resistor (CN7), and motor (CN8)		LXM28EUA5, LXM28EU01, LXM28EU02, LXM28EU04, LXM28EU07, LXM28EU10, LXM28EU15	VW3M4C21
		LXM28EU20	VW3M4C23
		LXM28EU30, LXM28EU45	VW3M4C24
Cable shield connection plate, clamps, and screws		LXM28EUA5, LXM28EU01, LXM28EU02, LXM28EU04, LXM28EU07, LXM28EU10, LXM28EU15	VW3M2C31
		LXM28EU20	VW3M2C33
		LXM28EU30, LXM28EU45	VW3M2C34
		Interface connector for CN1, 50-pin, 3 pieces	
Interface adapter for CN1, connector with 0.5 m (1.64 ft) cable and connection module with screw terminals for DIN rail mounting			VW3M1C13
Connector kit for motor	Motor end plastic connector	Without holding brake	VW3M5D1A
		With holding brake	VW3M5D1F
	Motor end MIL connector	With holding brake, size 100 … 130	VW3M5D2A
		With holding brake, size 180	VW3M5D2B
		For 8 mm^2 (AWG8) up to 16 mm^2 (AWG16) with holding brake, size 180	VW3M5D2C
		Device end IEEE1394 connector	VW3M8D2A
	Motor end flying leads	Device end IEEE1394 connector	VW3M8D1A

External Mains Filters

Description		Reference
Mains filter single-phase;115/230 Vac	9 A	VW3A4420
	16 A	VW3A4421
	23 A	VW3A4426
Mains filter three-phase; 208/400/480 Vac	15 A	VW3A4422
	25 A	VW3A4423
	47 A	VW3A4424

DC Bus Accessories

Description		Reference
DC bus connection cable, 2 x 6 mm^2 (2 x AWG 10)	Pre-assembled, 0.1 m (0.33 ft), 5 pieces	VW3M7101R01
	Twisted Pair, shielded, 15 m (49.2 ft)	VW3M7102R150
DC bus connector kit, connector housing, and crimp contacts for 3 ... 6 mm^2 (AWG 12 ... 10), 10 pieces		VW3M2207

A crimping tool is required for the crimp contacts of the connector kit.

Manufacturer: Tyco Electronics, Heavy Head Hand Tool, Tool Pt. No 180250

Application Nameplate

Description	Reference
Application nameplate to be clipped onto the top of the drive, size 38.5 mm (1.52 in) x 13 mm (0.51 in), 50 pieces	VW3M2501

Ethernet Shielded Twisted-pair Cables

Description			Reference
2 x RJ45, shielded twisted-pair cable	-	2 m (6.56 ft)	490NTW00002
		5 m (16.4 ft)	490NTW00005
		12 m (39.37 ft)	490NTW00012
	With UL and CSA 22.1 certification	2 m (6.56 ft)	490NTW00002U
		5 m (16.4 ft)	490NTW00005U
		12 m (39.37 ft)	490NTW00012U

Motor Cables

Description				Reference
Shielded motor cable without holding brake	Motor end plastic connector, other cable end flying leads	4 x 0.82 mm^2 (AWG 18)	1.5 m (4.92 ft)	VW3M5D1AR15
			3 m (9.84 ft)	VW3M5D1AR30
			5 m (16.4 ft)	VW3M5D1AR50
	Motor end MIL connector, other cable end flying leads	4 x 1.3 mm^2 (AWG 16)	3 m (9.84 ft)	VW3M5D2AR30
			5 m (16.4 ft)	VW3M5D2AR50
		4 x 3.3 mm^2 (AWG 12)	3 m (9.84 ft)	VW3M5D4AR30
			5 m (16.4 ft)	VW3M5D4AR50
		4 x 6 mm^2 (AWG 10)	3 m (9.84 ft)	VW3M5D6AR30
			5 m (16.4 ft)	VW3M5D6AR50
	Shielded motor cable with holding brake	Motor end plastic connector, other cable end flying leads	6 x 0.82 mm^2 (AWG 18)	3 m (9.84 ft)
				5 m (16.4 ft)
		Motor end MIL connector, other cable end flying leads	6 x 1.3 mm^2 (AWG 16)	3 m (9.84 ft)
				5 m (16.4 ft)
6 x 3.3 mm^2 (AWG 12)			3 m (9.84 ft)	VW3M5D4FR30
			5 m (16.4 ft)	VW3M5D4FR50
6 x 6 mm^2 (AWG 10)			3 m (9.84 ft)	VW3M5D6FR30
			5 m (16.4 ft)	VW3M5D6FR50

Encoder Cables and Accessories

Description			Reference
Encoder cable, 10 x 0.13 mm^2 (AWG 26) shielded	Motor end and device end plastic connector	1.5 m (4.92 ft)	VW3M8D1AR15
		3 m (9.84 ft)	VW3M8D1AR30
		5 m (16.4 ft)	VW3M8D1AR50
	Motor end MIL connector, other cable end plastic connector	3 m (9.84 ft)	VW3M8D2AR30
		5 m (16.4 ft)	VW3M8D2AR50
Battery compartment for multi turn encoder, cable 0.45 m (1.47 ft)			VW3M8BATC
Battery 3.6 Vdc for multi turn encoder			VW3M9BATT

NOTE: The battery compartment and the battery are not provided with motor equipped with a multi turn encoder and must be ordered separately.

Signal Cables

Description		Reference
Signal cable for signal interface CN1, device end 50-pin connector, other cable end flying leads	1 m (3.28 ft)	VW3M1C10R10
	2 m (6.56 ft)	VW3M1C10R20
	3 m (9.84 ft)	VW3M1C10R30

Signal Cable for Safety Function STO

Description		Reference
Signal cable for safety function STO CN9	1 m (3.28 ft)	VW3M1C20R10
	2 m (6.56 ft)	VW3M1C20R20
	3 m (9.84 ft)	VW3M1C20R30

External Braking Resistors and Holding Brake Controller

Description				Reference
Holding brake controller HBC with automatic voltage reduction; 24 V - 1.6 A				VW3M3103
Braking resistor IP 65 connection cable 2.1 mm^2 (AWG 14)	10 Ω	Maximum continuous power 400 W	0.75 m (2.46 ft)	VW3A7601R07
			2 m (6.56 ft)	VW3A7601R20
			3 m (9.84 ft)	VW3A7601R30
Braking resistor IP 65, UL connection cable 2.1 mm^2 (AWG 14)	27 Ω	Maximum continuous power 100 W	0.75 m (2.46 ft)	VW3A7602R07
			2 m (6.56 ft)	VW3A7602R20
			3 m (9.84 ft)	VW3A7602R30
		Maximum continuous power 200 W	0.75 m (2.46 ft)	VW3A7603R07
			2 m (6.56 ft)	VW3A7603R20
			3 m (9.84 ft)	VW3A7603R30
		Maximum continuous power 400 W	0.75 m (2.46 ft)	VW3A7604R07
			2 m (6.56 ft)	VW3A7604R20
			3 m (9.84 ft)	VW3A7604R30
	72 Ω	Maximum continuous power 200 W	0.75 m (2.46 ft)	VW3A7606R07
			2 m (6.56 ft)	VW3A7606R20
			3 m (9.84 ft)	VW3A7606R30
		Maximum continuous power 400 W	0.75 m (2.46 ft)	VW3A7607R07
			2 m (6.56 ft)	VW3A7607R20
			3 m (9.84 ft)	VW3A7607R30
Braking resistor IP20, UL screw terminals M6	16 Ω	Maximum continuous power 956 W	-	VW3A7733
	10 Ω			VW3A7734

Circuit Breakers

Description		Reference
Circuit breaker - thermal magnetic -screw terminals	4 … 6.3 A	GV2P10
	6 … 10 A	GV2P14
	9 … 14 A	GV2P16
	13 … 18 A	GV2P20
	17 … 23 A	GV2P21
	20 … 25 A	GV2P22
	24 … 32 A	GV2P32

Motor Protection Switches and Power Contactors

Drive	Nominal power	Order no. motor protection switch	Rated continuous current motor protection switch	Order no. power contactor
LXM28EUA5	50 W	GV2L10	6.3 A	LC1K0610••
LXM28EU01	100 W	GV2L10	6.3 A	LC1K0610••
LXM28EU02	200 W	GV2L14	10 A	LC1D09••
LXM28EU04	400 W	GV2L14	10 A	LC1D09••
LXM28EU07	750 W	GV2L16	14 A	LC1D12••
LXM28EU15	1500 W	GV2L22	25 A	LC1D18••
LXM28EU20	2000 W	GV2L32	30 A	LC1D32••
LXM28EU30	3000 W	GV2L32	30 A	LC1D32••

Control voltage power contactor		24 V	48 V	110 V	220 V	230 V	240 V
LC1K••••	50/60 Hz	B7	E7	F7	M7	P7	U7

Control voltage power contactor		24 V	48 V	110 V	220/230 V	230	230/240 V
LC1D••••	50 Hz	B5	E5	F5	M5	P5	U5
	60 Hz	B6	E&	F6	M6	-	U6
	50/60 Hz	B7	E7	F7	M7	P7	U7

Part III
Engineering

Chapter 7
Engineering

This chapter contains information on the application of the Servo Drive system for the engineering phase.

What Is in This Chapter?

This chapter contains the following sections:

Section	Topic	Page
7.1	Electromagnetic Compatibility (EMC)	100
7.2	Cables	104
7.3	Residual Current Device	106
7.4	Common DC Bus	107
7.5	Safety Function STO (“Safe Torque Off”)	108
7.6	Rating the Braking Resistor	120
7.7	Monitoring Functions	124
7.8	Configurable Inputs and Outputs	125
7.9	Wiring	126

Section 7.1
Electromagnetic Compatibility (EMC)

What Is in This Section?

This section contains the following topics:

Topic	Page
Electromagnetic Compatibility (EMC)	101
External Mains Filters	103

Electromagnetic Compatibility (EMC)

Signal interference can cause unexpected responses of the drive and of other equipment in the vicinity of the drive.

⚠ WARNING

SIGNAL AND EQUIPMENT INTERFERENCE

- Only operate the drive with the specified external mains filter.
- Install the wiring in accordance with the EMC requirements described in the present document.
- Verify compliance with the EMC requirements described in the present document.
- Verify compliance with all EMC regulations and requirements applicable in the country in which the product is to be operated and with all EMC regulations and requirements applicable at the installation site.

Failure to follow these instructions can result in death, serious injury, or equipment damage.

Limit Values

This product meets the EMC requirements according to the standard IEC 61800-3 if the measures described in this manual, and in particular the installation of the mains filters, are implemented during installation.

⚠ WARNING

ELECTROMAGNETIC DISTURBANCES OF SIGNALS AND DEVICES

Use proper EMC shielding techniques to help prevent unintended device operation in accordance with the standard IEC 61800-3.

Failure to follow these instructions can result in death, serious injury, or equipment damage.

These types of devices are not intended to be used on a low-voltage public network which supplies domestic premises. Radio frequency interference is expected if used in such a network.

⚠ WARNING

RADIO INTERFERENCE

Do not use these products in domestic electrical networks.

Failure to follow these instructions can result in death, serious injury, or equipment damage.

As a system provider, you may have to include this information in the documentation to your customer.

Equipotential Bonding Conductors

Potential differences can result in excessive currents on the cable shields. Use equipotential bonding conductors to reduce currents on the cable shields.

⚠ WARNING

UNINTENDED EQUIPMENT OPERATION

- Ground cable shields for all fast I/O, analog I/O, and communication signals at a single point. [1)]
- Route communications and I/O cables separately from power cables.

Failure to follow these instructions can result in death, serious injury, or equipment damage.

[1)] Multipoint grounding is permissible if connections are made to an equipotential ground plane dimensioned to help avoid cable shield damage in the event of power system short-circuit currents.

The equipotential bonding conductors must be rated for the maximum current. The following conductors cross sections can be used:

- 16 mm^2 (AWG 4) for equipotential bonding conductors up to a length of 200 m (656 ft)
- 20 mm^2 (AWG 4) for equipotential bonding conductors with a length of more than 200 m (656 ft)

EMC Requirements for the Control Cabinet

EMC measures	Objective
Use mounting plates with good electrical conductivity, connect large surface areas of metal parts, remove paint from contact areas.	Good conductivity due to large surface contact.
Ground the control cabinet, the control cabinet door, and the mounting plate with ground straps or ground wires. The conductor cross section must be at least 10 mm^2 (AWG 6).	Reduces emissions.
Install switching devices such as power contactors, relays, or solenoid valves with interference suppression units or arc suppressors (for example, diodes, varistors, RC circuits).	Reduces mutual interference
Do not install power components and control components adjacent to one another.	Reduces mutual interference

Additional Measures for EMC Improvement

Depending on the application, the following measures can improve the EMC-dependent values:

EMC measures	Objective
Use mains reactors.	Reduces mains harmonics, prolongs product service life.
Mount in a closed control cabinet with shielded attenuation of radiated interference	Improves the EMC limit values.

External Mains Filters

Filter/Drive Combinations

You can obtain EMC conformance by following the wiring standards and practices in the present document and installing, for each drive, the following filter/drive combination:

For further information, refer to Electromagnetic compatibility (EMC) *(see page 100)*.

LXM28E	Mains filter for single-phase connection	Mains filter for three-phase connection
UA5 = 0.05 kW U01 = 0.1 kW U02 = 0.2 kW U04 = 0.4 kW U07 = 0.75 kW U10 = 1 kW	VW3A4420	VW3A4422
U15 = 1.5 kW	VW3A4421	VW3A4422
U20 = 2 kW	-	VW3A4423
U30 = 3 kW U45 = 4.5 kW	-	VW3A4424

If you use mains filters of other manufacturers, these mains filters must have the same technical data as specified mains filters.

Emission

The specified limit values are complied with if the external mains filters available as accessories are used.

The following limit values for emission are complied with if the installation is EMC-compliant and if the cables offered as accessories are used.

Lexium 28E	Category
Conducted interference	C3
Radiated emission	C3

Section 7.2
Cables

Cables

Suitability of the Cables

Cables must not be twisted, stretched, crushed, or bent. Use only cables that comply with the cable specification. Consider the following in determining suitability of the cables:

- Suitable for drag chain applications
- Temperature range
- Chemical resistance
- Outdoor installation
- Underground installation

Equipotential Bonding Conductors

Potential differences can result in excessive currents on the cable shields. Use equipotential bonding conductors to reduce currents on the cable shields

⚠ WARNING

UNINTENDED EQUIPMENT OPERATION

- Ground cable shields for all fast I/O, analog I/O, and communication signals at a single point. [1)]
- Route communications and I/O cables separately from power cables.

Failure to follow these instructions can result in death, serious injury, or equipment damage.

[1)] Multipoint grounding is permissible if connections are made to an equipotential ground plane dimensioned to help avoid cable shield damage in the event of power system short-circuit currents.

The equipotential bonding conductor must be rated for the maximum current. The following conductor cross sections can be used:

- 16 mm^2 (AWG 4) for equipotential bonding conductors up to a length of 200 m (656 ft)
- 20 mm^2 (AWG 4) for equipotential bonding conductors with a length of more than 200 m (656 ft)

Conductor Cross Sections According to Method of Installation

The following sections describe the conductor cross sections for two methods of installation:

- Method of installation B2:
  Cables in conduits or cable trunking systems
- Method of installation E:
  Cables on open cable trays

Cross section in mm^2 (AWG)(1)	Current-carrying capacity with method of installation B2 in A(2)	Current carrying capacity with method of installation E in A(2)
0.75 (18)	8.5	10.4
1 (16)	10.1	12.4
1.5 (14)	13.1	16.1
2.5 (12)	17.4	22
4 (10)	23	30
6 (8)	30	37
10 (6)	40	52
16 (4)	54	70
25 (2)	70	88

(1) See chapter “Accessories and spare parts” *(see page 89)* for available cables.
(2) Values as per IEC 60204-1 for continuous operation, copper conductors, and ambient air temperature 40 °C (104 °F); see IEC 60204-1 for additional information.

Note the derating factors for grouping of cables and correction factors for other ambient conditions (IEC 60204-1).

The conductors must have a sufficiently large cross section so that the upstream fuse can trip.

In the case of longer cables, it may be necessary to use a greater conductor cross section to reduce the energy losses.

For conformance to UL requirements, use 75 °C (167 °F) copper conductors.

Section 7.3
Residual Current Device

Residual Current Device

Direct current can be introduced in the protective ground conductor of this drive. If a residual current device (RCD / GFCI) or a residual current monitor (RCM) is used for protection against direct or indirect contact, the following specific types must be used:

⚠ WARNING

DIRECT CURRENT CAN BE INTRODUCED INTO THE PROTECTIVE GROUND CONDUCTOR

- Use a Type A Residual Current Device (RCD / GFCI) or a Residual Current Monitor (RCM) for single-phase drives connected to a phase and to the neutral conductor.
- Use a Type B Residual Current Device (RCD / GFCI) or a Residual Current Monitor (RCM) that has approval for use with frequency inverters and is sensitive to all types of current for three-phase drives and for single-phase drives not connected to a phase and the neutral conductor.

Failure to follow these instructions can result in death, serious injury, or equipment damage.

Conditions for Use of Residual Current Device

- The drive has an increased leakage current at the moment power is applied. Use residual current devices with a response delay.
- High-frequency currents must be filtered.

Section 7.4
Common DC Bus

Common DC Bus

Function Principle

The DC buses of several devices can be connected so that energy can be used efficiently. If on device decelerates, a different device connected to the common DC bus can use the generated braking energy. Without a common DC bus, the braking energy would be converted to heat by the braking resistor while the other device would have to be supplied with energy from mains.

Another advantage of having a common DC bus is that several devices can share one external braking resistor. The number of the individual external braking resistors can be reduced to a single braking resistor if the braking resistor is properly rated.

This and other important information can be found in the Common DC bus Application Note for the drive. If you wish to take advantage of DC bus sharing, you must first consult the Common DC bus Application Note for important safety-related information.

Requirements for Use

The requirements and limit values for parallel connection of multiple devices via the DC bus are described in the Common DC bus Application Note for the drive that can be found on *http://www.schneider-electric.com*. If there are any issues or questions related to obtaining the Common DC bus Application Note, consult your local Schneider-Electric representative.

Section 7.5
Safety Function STO (“Safe Torque Off”)

For information on using the IEC 61508 standard, refer to Functional Safety *(see page 110)*.

What Is in This Section?

This section contains the following topics:

Topic	Page
Process Minimizing Risks Associated with the Machine	109
Functional Safety	110
Definitions	113
Function	114
Requirements for Using the Safety Function	115
Application Examples STO	118

Process Minimizing Risks Associated with the Machine

General

The goal of designing machines safely is to protect people. The risk associated with machines with electrically controlled drives comes chiefly from moving machine parts and electricity itself.

Only you, the user, machine builder, or system integrator can be aware of all the conditions and factors realized in the design of your application for the machine. Therefore, only you can determine the automation equipment and the related safeties and interlocks which can be properly used, and validate such usage.

Hazard and Risk Analysis

Based on the system configuration and utilization, a hazard and risk analysis must be carried out for the system (for example, according to EN ISO 12100 or EN ISO 13849-1). The results of this analysis must be considered when designing the machine, and subsequently applying safety-related equipment and safety-related functions. The results of your analysis may deviate from any application examples contained in the present or related documentation. For example, additional safety components may be required. In principle, the results from the hazard and risk analysis have priority.

⚠ WARNING

NON-CONFORMANCE TO SAFETY FUNCTION REQUIREMENTS

- Specify the requirements and/or measures to be implemented in the risk analysis you perform.
- Verify that your safety-related application complies to applicable safety regulations and standards.
- Make certain that appropriate procedures and measures (according to applicable sector standards) have been established to help avoid hazardous situations when operating the machine.
- Use appropriate safety interlocks where personnel and/or equipment hazards exist.
- Validate the overall safety-related function and thoroughly test the application.

Failure to follow these instructions can result in death, serious injury, or equipment damage.

The EN ISO 13849-1 Safety of machinery - Safety-related parts of control systems - Part 1: General principles for design describes an iterative process for the selection and design of safety-related parts of controllers to reduce the risk to the machine to a reasonable degree:

To perform risk assessment and risk minimization according to EN ISO 12100, proceed as follows:

1. Defining the boundary of the machine.
2. Identifying risks associated with the machine.
3. Assessing risks.
4. Evaluating risks.
5. Minimizing risks by:
   - Intrinsically safe design
   - Protective devices
   - User information (see EN ISO 12100)
6. Designing safety-related controller parts (SRP/CS, Safety-Related Parts of the Control System) in an interactive process.

To design the safety-related controller parts in an interactive process, proceed as follows:

Step	Action
1	Identify necessary safety functions that are executed via SRP/CS (Safety-Related Parts of the Control System).
2	Determine required properties for each safety function.
3	Determine the required performance level PL_r.
4	Identify safety-related parts executing the safety function.
5	Determine the performance level PL of the afore-mentioned safety-related parts.
6	Verify the performance level PL for the safety function ($PL \geq PL_r$).
7	Verify if all requirements have been met (validation).

Additional information is available on *www.schneider-electric.com*.

Functional Safety

Overview

Automation and safety engineering are closely related. Engineering, installation, and operation of complex automation solutions are greatly simplified by integrated safety-related functions and modules.

Usually, the safety-related engineering requirements depend on the application. The level of the requirements results from, among other things, the risk, and the hazard potential arising from the specific application and from the applicable standards and regulations.

IEC 61508 and IEC 61800-5-2

The standard IEC 61508 “Functional safety of electrical/electronic/programmable electronic safety-related systems” defines the safety-related aspects of systems. Instead of a single functional unit of a safety-related system, the standard treats all elements of a function chain as a unit. These elements must meet the requirements of the specific safety integrity level as a whole.

The standard IEC 61800-5-2 “Adjustable speed electrical power drive systems – Safety requirements – Functional” is a product standard that defines the safety-related requirements regarding drives. Among other things, this standard defines the safety functions for drives.

Safety Integrity Level (SIL)

The standard IEC 61508 defines 4 safety integrity levels (Safety Integrity Level (SIL)). Safety integrity level SIL1 is the lowest level, safety integrity level SIL4 is the highest level. The safety integrity level required for a given application is determined on the basis of the hazard potential resulting from the hazard and risk analysis. This is used to decide whether the relevant function chain is to be considered as a safety-related function chain and which hazard potential it must cover.

Average Frequency of a Dangerous Failure Per Hour (PFH)

To maintain the function of the safety-related system, the IEC 61508 standard requires various levels of measures for avoiding and controlling faults, depending on the required safety integrity level (Safety Integrity Level (SIL)). All components must be subjected to a probability assessment to evaluate the effectiveness of the measures implemented for controlling faults. This assessment determines the probability of a dangerous failure per hour PFH (Average Frequency of a Dangerous Failure per Hour (PFH)) for a safety-related system. This is the frequency per hour with which a safety-related system fails in a hazardous manner so that it can no longer perform its function correctly. Depending on the SIL, the average frequency of a dangerous failure per hour must not exceed certain values for the entire safety-related system. The individual PFH values of a function chain are added. The result must not exceed the maximum value specified in the standard.

SIL	PFH at high demand or continuous demand
4	$\geq 10^{-9} \ldots < 10^{-8}$
3	$\geq 10^{-8} \ldots < 10^{-7}$
2	$\geq 10^{-7} \ldots < 10^{-6}$
1	$\geq 10^{-6} \ldots < 10^{-5}$

Hardware Fault Tolerance (HFT) and Safe Failure Fraction (SFF)

Depending on the safety integrity level (Safety Integrity Level (SIL)) for the safety-related system, the IEC 61508 standard requires a specific hardware fault tolerance (Hardware Fault Tolerance (HFT)) in connection with a specific safe failure fraction (Safe Failure Fraction (SFF)). The hardware fault tolerance is the ability of a safety-related system to execute the required function even if one or more hardware faults are present. The safe failure fraction of a safety-related system is defined as the ratio of the rate of safe failures to the total failure rate of the safety-related system. As per IEC 61508, the maximum achievable safety integrity level of a safety-related system is partly determined by the hardware fault tolerance and the safe failure fraction of the safety-related system.

IEC 61800-5-2 distinguishes two types of subsystems (type A subsystem, type B subsystem). These types are specified on the basis of criteria which the standard defines for the safety-related components.

SFF	HFT type A subsystem			HFT type B subsystem		
	0	1	2	0	1	2
<60 %	SIL1	SIL2	SIL3	---	SIL1	SIL2
60 … <90 %	SIL2	SIL3	SIL4	SIL1	SIL2	SIL3
90 … <99 %	SIL3	SIL4	SIL4	SIL2	SIL3	SIL4
≥99 %	SIL3	SIL4	SIL4	SIL3	SIL4	SIL4

Fault Avoidance Measures

Systematic errors in the specifications, in the hardware and the software, incorrect usage and maintenance of the safety-related system must be avoided to the maximum degree possible. To meet these requirements, IEC 61508 specifies a number of measures for fault avoidance that must be implemented depending on the required safety integrity level (Safety Integrity Level (SIL)). These measures for fault avoidance must cover the entire life cycle of the safety-related system, i.e. from design to decommissioning of the system.

Data for Maintenance Plan and the Calculations for the Safety Function

The safety function must be tested at regular intervals. The interval depends on the hazard and risk analysis of the total system. The minimum interval is 1 year (high demand mode as per IEC 61508).

Use the following data of the safety function STO for your maintenance plan and the calculations for the safety function:

Description	Unit	Value
Lifetime of the safety function STO (IEC 61508)(1)	Years	20
SFF (IEC 61508) Safe Failure Fraction	%	98.9
Safety integrity level IEC 61508 IEC 62061 IEC 61800-5-2	–	SIL CL 2
PFH (IEC 61508) Probability of Dangerous Hardware Failure per Hour	1/h	STO_A(2): 1.7×10^{-9} STO_B(3): 1.5×10^{-9}
PFD_{avg} (IEC 61508) Probability of Failure on Demand, calculated as one demand per year	–	STO_A(2): 1.5×10^{-4} STO_B(3): 1.3×10^{-4}
PL (ISO 13849-1) Performance Level	–	d (category 3)
$MTTF_d$ (ISO 13849-1) Mean Time to Dangerous Failure	Years	STO_A(2): 66757 STO_B(3): 78457
DC_{avg} (ISO 13849-1) Diagnostic Coverage	%	≥90
(1) See chapter Lifetime Safety Function STO *(see page 326)* (2) STO_A: LXM28EUA5,LXM28EU01, LXM28EU02, LXM28EU04, LXM28EU07, LXM28EU10,LXM28EU15, LXM28EU20 (3) STO_B: LXM28EU30, LXM28EU45		

If two non-adjacent IGBTs have a short circuit, a movement of a maximum of 120 degrees (electrical) can occur even if the safety function STO is active. Include in your risk analysis the probability of IGBT short circuits, and make a determination whether it is acceptable as it relates to your application.

⚠ WARNING

UNINTENTIONAL MOVEMENT DURING STO FUNCTION

Use appropriate safety interlocks (such as a service brake) where personnel and/or equipment hazards exist.

Failure to follow these instructions can result in death, serious injury, or equipment damage.

The probability of such a condition is 1.5×10^{-15} per hour (without common cause error). Include this in your calculations for the safety function.

Contact your local sales office for additional data, if required.

Definitions

Integrated Safety Function "Safe Torque Off" STO

The integrated safety function STO (IEC 61800-5-2) allows for a category 0 stop as per IEC 60204-1 without external power contactors. It is not necessary to interrupt the supply voltage for a category 0 stop. This reduces the system costs and the response times.

Category 0 Stop (IEC 60204-1)

In stop category 0 (Safe Torque Off, STO), the drive coasts to a stop (provided there are no external forces operating to the contrary). The STO safety-related function is intended to help prevent an unintended start-up, not stop a motor, and therefore corresponds to an unassisted stop in accordance with IEC 60204-1.

In circumstances where external influences are present, the coast down time depends on physical properties of the components used (such as weight, torque, friction, etc.), and additional measures such as mechanical brakes may be necessary to help prevent any hazard from materializing. That is to say, if this means a hazard to your personnel or equipment, you must take appropriate measures.

⚠ WARNING

UNINTENDED EQUIPMENT OPERATION

- Make certain that no hazards can arise for persons or material during the coast down period of the axis/machine.
- Do not enter the zone of operation during the coast down period.
- Ensure that no other persons can access the zone of operation during the coast down period.
- Use appropriate safety interlocks where personnel and/or equipment hazards exist.

Failure to follow these instructions can result in death, serious injury, or equipment damage.

Category 1 Stop (IEC 60204-1)

For stops of category 1 (Safe Stop 1, SS1), you can initiate a controlled stop via the control system, or through the use of specific functional safety-related devices. A Category 1 Stop is a controlled stop with power available to the machine actuators to achieve the stop.

The controlled stop by the control/safety-related system is not safety-relevant, nor monitored, and does not perform as defined in the case of a power outage or if an error is detected. This has to be implemented by means of an external safety-related switching device with safety-related delay.

Function

The safety function STO integrated into the product can be used to implement an “EMERGENCY STOP” (IEC 60204-1) for category 0 stops. With an additional, approved EMERGENCY STOP safety relay module, it is also possible to implement category 1 stops.

The safety function STO switches the supply voltage of the IGBT drivers so that PWM signals cannot switch the IGBTs. The following diagram illustrates the concept:

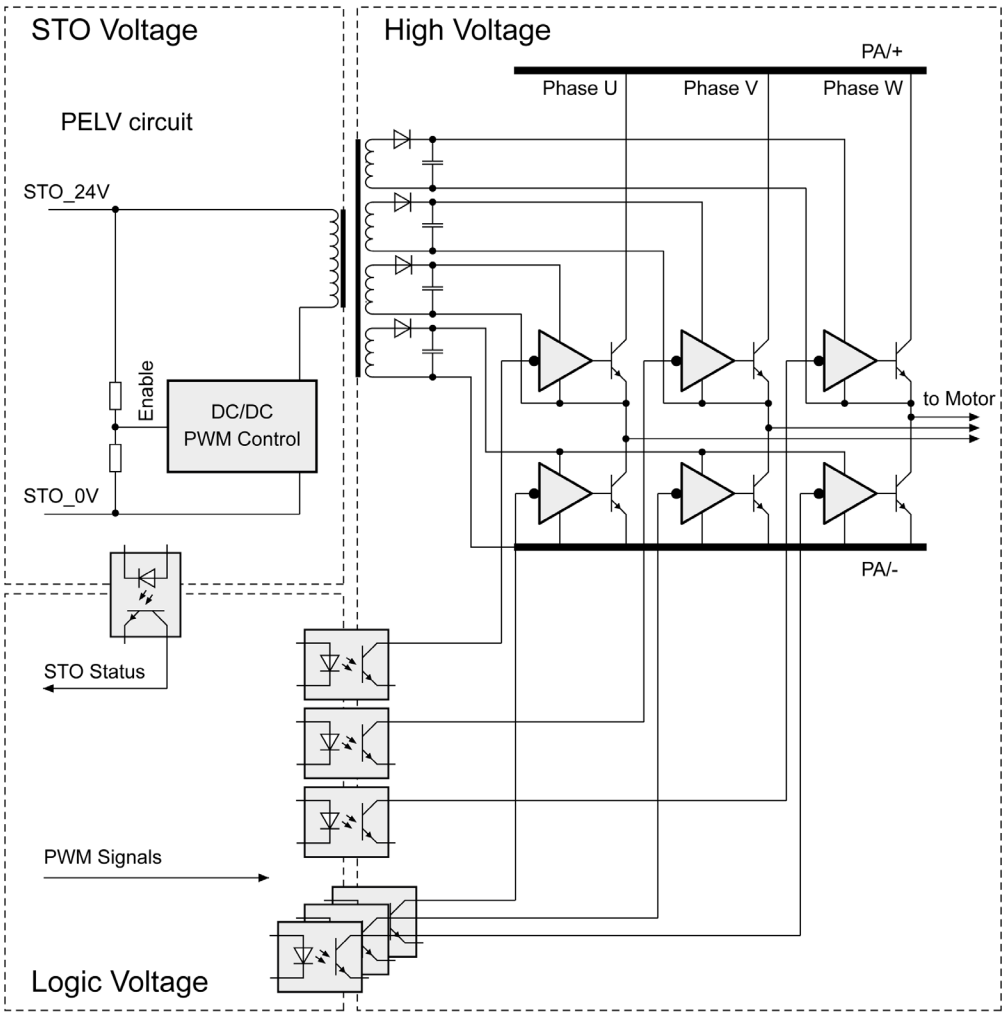

Requirements for Using the Safety Function

The safety function STO (Safe Torque Off) does not remove power from the DC bus. The safety function STO only removes power to the motor. The DC bus voltage and the mains voltage to the drive are still present.

⚠ DANGER

ELECTRIC SHOCK

- Do not use the safety function STO for any other purposes than its intended function.
- Use an appropriate switch, that is not part of the circuit of the safety function STO, to disconnect the drive from the mains power.

Failure to follow these instructions will result in death or serious injury.

After the safety function STO is triggered, the motor can no longer generate torque and coasts down without braking in the case of motors without a holding brake. In the case of motors with holding brake, the holding brake is not a safety-related function, and may not be sufficient to hold the axis at a standstill.

⚠ WARNING

UNINTENDED EQUIPMENT OPERATION

Install a dedicated service brake if coasting does not meet the deceleration requirements of your application.

Failure to follow these instructions can result in death, serious injury, or equipment damage.

The safety function STO is factory-deactivated by means of the jumper for CN9. If you want to use the safety function STO, you must remove the jumper for CN9. You may only use the safety function STO with an external PELV 24 Vdc power supply unit.

⚠ WARNING

UNINTENDED EQUIPMENT OPERATION

- Remove the jumpers connected to the STO power connector (CN9) only if you intend to use the STO safety-related function for your application.
- Use only an external PELV 24 Vdc power supply unit when applying the safety-related STO function.

Failure to follow these instructions can result in death, serious injury, or equipment damage.

For additional information on deactivating the safety function STO, refer to Connection STO (CN9) *(see page 162)*.

Holding Brake and Safety Function STO

When the safety function STO is triggered, the power stage is immediately disabled. In the case of vertical axes or external forces acting on the load, you may have to take additional measures to bring the load to a standstill and to keep it at a standstill when the safety function STO is used, for example, by using a service brake.

⚠ WARNING

FALLING LOAD

Ensure that all loads come to a secure standstill when the safety function STO is used.

Failure to follow these instructions can result in death, serious injury, or equipment damage.

If the suspension of hanging / pulling loads is a safety objective for the machine, then you can only achieve this objective by using an appropriate external brake as a safety-related measure.

⚠ WARNING

UNINTENDED AXIS MOVEMENT

- Do not use the internal holding brake as a safety-related measure.
- Only use certified external brakes as safety-related measures.

Failure to follow these instructions can result in death, serious injury, or equipment damage.

NOTE: The drive does not provide its own safety-related output to connect an external brake to use as a safety-related measure.

Unintended Restart

To help avoid unintended restart of the motor after restoration of power (for example, after power outage), the parameter P2-68 must be set to “X=0”. A controlled restart must be managed externally from the drive, note that the external management itself must not trigger an unintended restart.

⚠ WARNING

UNINTENDED EQUIPMENT OPERATION

Set parameter P2-68 setting X to 0 (zero) if the automatic enabling of the power stage presents hazards in your application.

Failure to follow these instructions can result in death, serious injury, or equipment damage.

Degree of Protection When the Safety Function Is Used

You must ensure that conductive substances cannot get into the product (pollution degree 2). Conductive substances may cause the safety function to become inoperative.

⚠ WARNING

INOPERABLE SAFETY FUNCTION

Ensure that conductive substances (water, contaminated or impregnated oils, metal shavings, etc.) cannot get into the drive.

Failure to follow these instructions can result in death, serious injury, or equipment damage.

Protected Cable Installation

If short circuits or other wiring errors such as a cross fault between STO inputs can be expected in connection with safety-related signals, and if these short circuits or other wiring errors are not detected by upstream devices, protected cable installation as per ISO 13849-2 is required.

ISO 13849-2 describes protected cable installation for cables for safety-related signals. The cables for the safety function STO must be protected against external voltage. A shield with ground connection helps to keep external voltage away from the cables for the signals of the safety function STO.

- Use shielded cables for the signals of the safety function STO.
- Do not use the cable for the signals of the safety function STO for other signals.
- Connect one end of the shield.
- When daisychaining the signals of the safety function STO, connect the shield to the equipotential grounding plane associated to the drives.

Hazard and Risk Analysis

You must conduct, or ensure that your OEM, system integrator, or anyone responsible for the development of the application containing the equipment indicated in the present document conducts a hazard and risk analysis of the entire system. The results of the analysis must be taken into account in the application of the safety function.

The type of circuit resulting from the analysis may differ from any application examples provided in the present document or any supplementary documents concerning this equipment. Additional safety components may be required. The results of the hazard and risk analysis have priority over any other design considerations. Pay particular attention in conforming to any safety information, different electrical requirements, and normative standards that would apply to your system.

⚠ WARNING

UNINTENDED EQUIPMENT OPERATION

- Perform a hazard and risk analysis to determine the appropriate safety integrity level, and any other safety requirements, for your specific application based on all the applicable standards.
- Ensure that the hazard and risk analysis is conducted and respected according to EN/ISO 12100 during the design of your machine.

Failure to follow these instructions can result in death, serious injury, or equipment damage.

Application Examples STO

Example of Category 0 Stop

Use without EMERGENCY STOP safety relay module, category 0 stop.

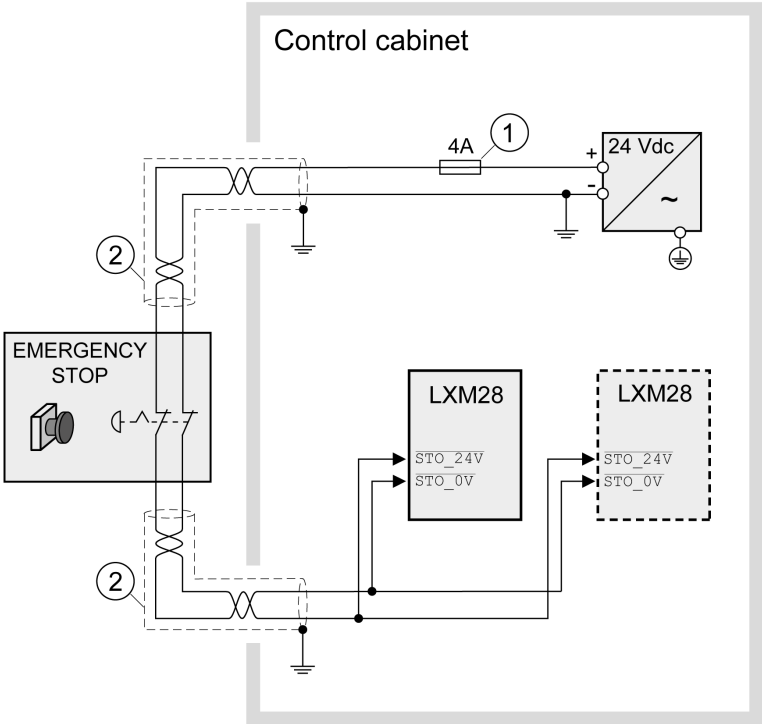

1 If the maximum output current of the 24 V power supply exceeds 4 A, a 4 A slow-blow fuse is required.
2 Grounded shielded cable for wiring out of the control cabinet.

For further information on STO wiring, refer to Connection of STO (CN9) *(see page 162)*

NOTE: The internal DC power supply of the drive is only to be used to deactivate the safety function STO via the jumper supplied with the drive.

⚠ WARNING

UNINTENDED EQUIPMENT OPERATION

- Remove the jumpers connected to the STO power connector (CN9) only if you intend to use the STO safety-related function for your application.
- Use only an external PELV 24 Vdc power supply unit when applying the safety-related STO function.

Failure to follow these instructions can result in death, serious injury, or equipment damage.

In this example, when an EMERGENCY STOP is activated, it leads to a category 0 stop:

The power stage is immediately disabled via the inputs STO_24V and STO_0V of the safety function STO. Power can no longer be supplied to the motor. If the motor is not already at a standstill when the STO is triggered, it decelerates under the salient physical forces (gravity, friction, etc.) active at the time until presumably coasting to a standstill.

⚠ WARNING

UNINTENDED EQUIPMENT OPERATION

Install a dedicated service brake if coasting does not meet the deceleration requirements of your application.

Failure to follow these instructions can result in death, serious injury, or equipment damage.

If the coasting of the motor and its potential load is unsatisfactory as determined by your risk and hazard analysis, an external service brake may also be required. Refer to Holding Brake and Safety Function STO *(see page 116)*.

Example of Category 1 Stop

Use with EMERGENCY STOP safety relay module, category 1 stop. Example of category 1 stop with external Preventa XPS-AV EMERGENCY STOP safety relay module.

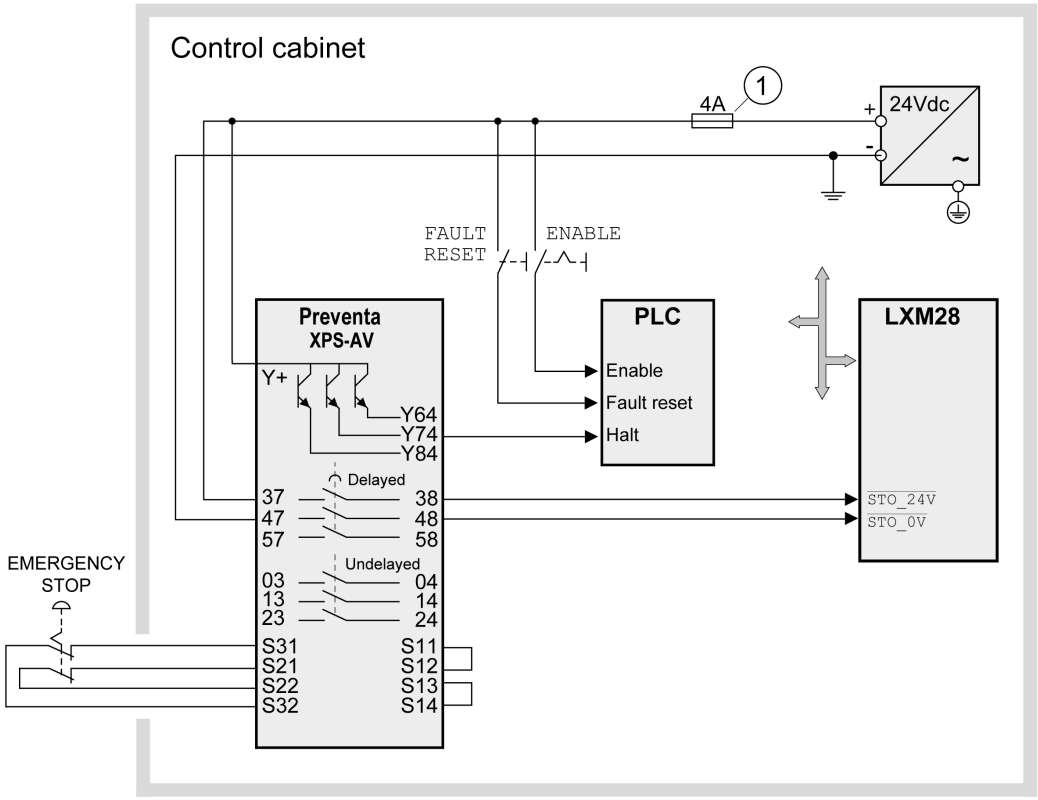

1 If the maximum output current of the 24 V power supply exceeds 4 A, a 4 A slow-blow fuse is required.

For more information on STO wiring, see chapter Connection of STO (CN9) *(see page 162)*

In this example, when an EMERGENCY STOP is activated, it leads to a category 1 stop:

- The safety relay module requests an immediate stop (undelayed) of the drive via the logic controller (Halt). The logic controller takes the configured or programmed action to instruct the drive to make a decelerated stop.
- The power stage is disabled via the inputs STO_24V and STO_0V of the safety function STO after the delay time set in the EMERGENCY STOP safety relay module has elapsed. Power can no longer be supplied to the motor. If the motor is not already at a standstill when safety function STO is triggered when the delay time has elapsed, it decelerates under the salient physical forces (gravity, friction, etc.) active at the time until presumably coasting to a standstill.

If the coasting of the motor and its potential load is unsatisfactory as determined by your risk and hazard analysis, an external service brake may also be required. Refer to Holding Brake and Safety Function STO *(see page 116)*.

⚠ WARNING

UNINTENDED EQUIPMENT OPERATION

Install a dedicated service brake if coasting does not meet the deceleration requirements of your application.

Failure to follow these instructions can result in death, serious injury, or equipment damage.

NOTE: The specified minimum current and the permissible maximum current of the relay outputs of the EMERGENCY STOP safety relay module must be respected.

Section 7.6
Rating the Braking Resistor

What Is in This Section?

This section contains the following topics:

Topic	Page
Rating the Braking Resistor	121
Internal Braking Resistor	122
External Braking Resistors	123

Rating the Braking Resistor

Braking resistors are required for dynamic applications. During deceleration, the kinetic energy is transformed into electrical energy in the motor. The electrical energy increases the DC bus voltage. The braking resistor is activated when the defined threshold value is exceeded. The braking resistor transforms electrical energy into heat. If highly dynamic deceleration is required, the braking resistor must be well adapted to the system. External driving forces acting on the motor can cause high currents to be regenerated and supplied back to the drive.

⚠ DANGER

FIRE DUE TO EXTERNAL DRIVING FORCES ACTING ON MOTOR

Verify that no external forces can act on the motor that will exceeded the capacity of the braking resistor.

Failure to follow these instructions will result in death or serious injury.

An insufficiently rated braking resistor can cause overvoltage on the DC bus. Overvoltage on the DC bus causes the power stage to be disabled. The motor is no longer actively decelerated.

⚠ WARNING

UNINTENDED EQUIPMENT OPERATION

- Verify that the braking resistor has a sufficient rating by performing a test run under maximum load conditions.
- Verify that the parameter settings for the braking resistor are correct.

Failure to follow these instructions can result in death, serious injury, or equipment damage.

If multiple drives are connected via a common DC bus, this affects all motors. For further information, refer to Common DC bus *(see page 107)*.

An external braking resistor *(see page 94)* is required for applications in which the motor must be decelerated quickly and the internal braking resistor cannot absorb the excess braking energy.

Internal Braking Resistor

Introduction

The drive has an internal braking resistor. If the internal braking resistor is insufficient for the dynamics of the application, one or more external braking resistors must be used.

The resistance values for external braking resistors must not be below the specified minimum resistance. If an external braking resistor is activated by using the appropriate parameter, the internal braking resistor is deactivated.

LXM28E•••M1X	Unit	UA5, U01, U02, U04	U07
Resistance value of internal braking resistor	Ω	100	40
Continuous power internal braking resistor P_{PR}	W	60	
Peak energy E_{CR}(1)	Ws	152	380
External braking resistor minimum	Ω	25	
External braking resistor maximum(2)	Ω	50	
Maximum continuous power external braking resistor	W	640	
Switch-on voltage braking resistor	V	390	
Capacitance of the internal capacitors	µF	1640	
Energy absorption of internal capacitors E_{var} at nominal voltage 120 V +10%	Ws	8.87	

(1) Parameter P1-71 is set to 100 ms.
(2) The maximum specified braking resistor can derate the peak power of the device. Depending on the application, it is possible to use a greater ohm resistor.

LXM28E•••M3X	Unit	UA5, U01, U02, U04	U07	U10, U15	U20	U30, U45
Resistance value of internal braking resistor	Ω	100	40			22
Continuous power internal braking resistor P_{PR}	W	60	60			100
Peak energy E_{CR}(1)	Ws	152	380			691
External braking resistor minimum	Ω	25		15	8	
External braking resistor maximum(2)	Ω	50			25	
Maximum continuous power external braking resistor	W	640		1000	1500	2500
Switch-on voltage braking resistor	V	390				
Capacitance of the internal capacitors	µF	820		1640	2110	3280
Energy absorption of internal capacitors E_{var} at nominal voltage 230 V +10%	Ws	8.87		17.76	22.82	35.51

(1) Parameter P1-71 is set to 100 ms.
(2) The maximum specified braking resistor can derate the peak power of the device. Depending on the application, it is possible to use a greater ohm resistor.

External Braking Resistors

Introduction

An external braking resistor is required for applications in which the motor must be decelerated quickly and the internal braking resistor cannot absorb the excess braking energy. The temperature of the braking resistor may exceed 250 °C (482 °F) during operation.

⚠ WARNING

HOT SURFACES

- Ensure that it is not possible to make any contact with a hot braking resistor.
- Do not allow flammable or heat-sensitive parts in the immediate vicinity of the braking resistor.
- Verify that the heat dissipation is sufficient by performing a test run under maximum load conditions.

Failure to follow these instructions can result in death, serious injury, or equipment damage.

VW3A760•	Unit	1R•• (1)	2R••	3R••	4R•• (1)	5R••	6R••	7R•• (1)
Resistance	Ω	10	27			72		
Continuous power	W	400	100	200	400	100	200	400
Maximum time in braking at 115 V / 230 V	s	0.72	0.552	1.08	2.64	1.44	3.72	9.6
Peak power at 115 V / 230 V	kW	18.5	6.8			2.6		
Maximum peak energy at 115 V / 230 V	Ws	13300	3800	7400	18100	3700	9600	24700
Degree of protection	-	IP 65						
(1) Resistors with a continuous power of 400 W are not UL/CSA-approved.								

VW3A77•	Unit	04	05
Resistance	Ω	15	10
Continuous power	W	1000	
Maximum time in braking at 115 V / 230 V	s	3.5	1.98
Peak power at 115 V / 230 V	kW	12.3	18.5
Maximum peak energy at 115 V / 230 V	Ws	43100	36500
Degree of protection	-	IP20	

Section 7.7
Monitoring Functions

Monitoring Functions

Overview

The monitoring functions of the drive can be used to monitor movements and to monitor internal signals. These monitoring functions are not safety-related functions.

The following monitoring functions are available:

Monitoring function	Task
Data connection	Monitors data connection for interruption
Limit switch signals	Monitors for permissible movement range
Position deviation	Monitors for difference between actual position and reference position
Motor overload	Monitors for excessively high current in the motor phases
Overvoltage and undervoltage	Monitors for overvoltage and undervoltage of the power stage supply and the DC bus
Overtemperature	Monitors the drive for overtemperature
Encoder overtemperature	Monitors the encoder for overtemperature
Overvoltage and undervoltage	Monitors the logic supply and power stage supply for permissible voltage range
Overvoltage at digital inputs	Monitors the digital inputs for overvoltage
Power supply encoder	Monitors the encoder supply for short circuit and permissible voltage range
Current limitation (Foldback)	Power limitation in the case of overloads for the motor, the output current, the output power, and the braking resistor.

Section 7.8
Configurable Inputs and Outputs

Configurable Inputs and Outputs

Presentation

This drive has digital inputs and outputs that can be configured. The inputs and outputs have a defined default assignment depending on the operating mode. This assignment can be adapted to the requirements of the customer's installation.

For further details, refer to chapter Operation *(see page 265)*.

Section 7.9
Wiring

General Wiring

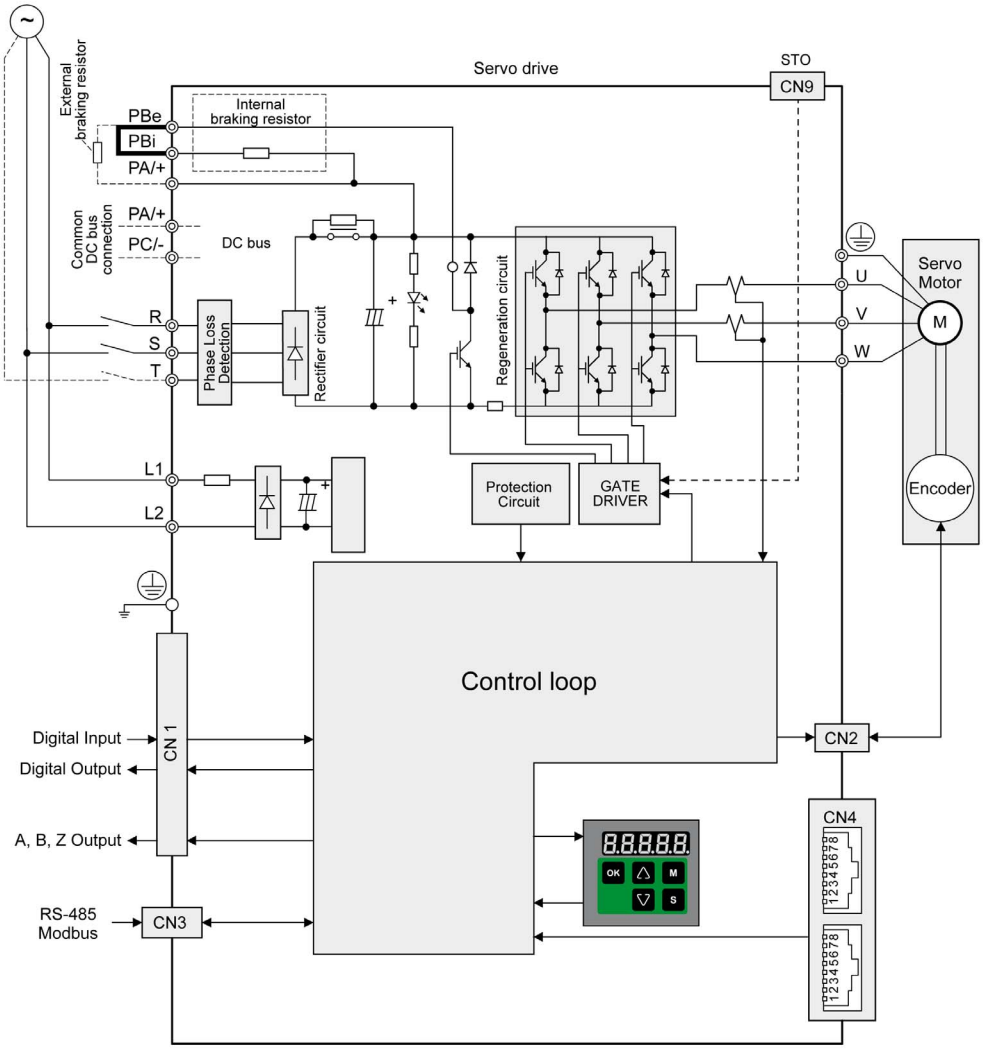

Part IV
Installation

Introduction

An engineering phase is mandatory prior to mechanical and electrical installation. For basic information, refer to Engineering *(see page 99)*.

⚠ ⚠ DANGER

INSUFFICIENT GROUNDING

- Use a protective ground conductor with at least 10 mm2 (AWG 6) or two protective ground conductors with the cross section of the conductors supplying the power terminals.
- Verify compliance with all local and national electrical code requirements as well as all other applicable regulations with respect to grounding of the entire drive system.
- Ground the drive system before applying voltage.
- Do not use conduits as protective ground conductors; use a protective ground conductor inside the conduit.
- Do not use cable shields as protective ground conductors.
- Keep foreign objects from getting into the product.
- Verify the correct seating of seals and cable entries in order to avoid contamination such as deposits and humidity.

Failure to follow these instructions will result in death or serious injury.

In the case of a ground error, the maximum permissible current in the motor phases may be exceeded.

⚠ DANGER

FIRE CAUSED BY INCORRECT INSTALLATION

Use upstream, external ground error detection equipment (Residual Current Device / Ground Fault Circuit Interrupter).

Failure to follow these instructions will result in death or serious injury.

⚠ WARNING

LOSS OF CONTROL

- The designer of any control scheme must consider the potential failure modes of control paths and, for certain critical control functions, provide a means to achieve a safe state during and after a path failure. Examples of critical control functions are emergency stop and overtravel stop, power outage and restart.
- Separate or redundant control paths must be provided for critical control functions.
- System control paths may include communication links. Consideration must be given to the implications of unanticipated transmission delays or failures of the link.
- Observe all accident prevention regulations and local safety guidelines.[1]
- Each implementation of this equipment must be individually and thoroughly tested for proper operation before being placed into service.

Failure to follow these instructions can result in death, serious injury, or equipment damage.

[1] For additional information, refer to NEMA ICS 1.1 (latest edition), “Safety Guidelines for the Application, Installation, and Maintenance of Solid State Control” and to NEMA ICS 7.1 (latest edition), “Safety Standards for Construction and Guide for Selection, Installation and Operation of Adjustable-Speed Drive Systems” or their equivalent governing your particular location.

Conductive foreign objects, dust or liquids may cause safety functions to become inoperative.

⚠ WARNING

LOSS OF SAFETY FUNCTION CAUSED BY FOREIGN OBJECTS

Protect the system against contamination by conductive substances.

Failure to follow these instructions can result in death, serious injury, or equipment damage.

The metal surfaces of the product may exceed 65 °C (149 °F) (for bare metal) during operation.

⚠ WARNING

HOT SURFACES

- Avoid unprotected contact with hot surfaces.
- Do not allow flammable or heat-sensitive parts in the immediate vicinity of hot surfaces.
- Verify that the heat dissipation is sufficient by performing a test run under maximum load conditions.

Failure to follow these instructions can result in death, serious injury, or equipment damage.

⚠ CAUTION

INOPERABLE EQUIPMENT DUE TO INCORRECT MAINS VOLTAGE CONNECTION

- Verify that you use the correct mains voltage; install a transformer, if necessary.
- Do not connect mains voltage to the output terminals (U, V, W).

Failure to follow these instructions can result in injury or equipment damage.

What Is in This Part?

This part contains the following chapters:

Chapter	Chapter Name	Page
8	Before Mounting	129
9	Drive Installation	133
10	Motor Installation	165
11	Verifying Installation	175

Chapter 8
Before Mounting

What Is in This Chapter?

This chapter contains the following topics:

Topic	Page
Inspecting the Product	130
Scope of Supply	131

Inspecting the Product

Inspecting the Product

- Verify the product version by means of the type code on the nameplate. Refer to chapter Nameplate *(see page 36)* and chapter Type Code *(see page 37)*.
- Prior to mounting, inspect the product for visible damage.

Damaged products may cause electric shock or unintended equipment operation.

DANGER

ELECTRIC SHOCK OR UNINTENDED EQUIPMENT OPERATION

- Do not use damaged products.
- Keep foreign objects (such as chips, screws or wire clippings) from getting into the product.

Failure to follow these instructions will result in death or serious injury.

Contact your local Schneider Electric representative if you detect any damage whatsoever to the products.

Scope of Supply

Drive

- Drive Lexium 28E
- Connector kit with 3 connectors for:
  - Power stage supply and logic supply
  - Braking resistor
    Including jumper between **PBi** and **PBe**
  - Motor
- Plastic tool for opening the spring terminals (available for devices from 50 W to 1.5 kW)
- 4-pin connector for deactivating the safety function STO (CN9)
- Adhesive hazard labels in 5 languages (German, French, Italian, Spanish, Chinese)
- Instruction sheet for the product

Motor

- BCH2 servo motor
- BCH2•R: 2 eyebolts
- Information sheet for the product

Chapter 9
Drive Installation

What Is in This Chapter?

This chapter contains the following topics:

Topic	Page
Mechanical Installation Drive	134
Electrical Installation Drive	136
Connection Grounding Screw	138
Connection I/O Interface (CN1)	139
Connecting the Motor Encoder (CN2)	146
Connection PC (CN3)	148
Connection Fieldbus (CN4)	150
Connection Logic Supply and Power Stage Supply (CN5)	152
Connection DC Bus (CN6)	155
Connection Braking Resistor (CN7)	156
Connecting the Motor Phases (CN8)	158
Holding Brake Connection	161
Connection STO (CN9)	162

Mechanical Installation Drive

⚠ ⚠ DANGER

ELECTRIC SHOCK OR UNINTENDED EQUIPMENT OPERATION

- Keep foreign objects from getting into the product.
- Verify the correct seating of seals and cable entries in order to avoid contamination such as deposits and humidity.

Failure to follow these instructions will result in death or serious injury.

Conductive foreign objects, dust or liquids may cause safety functions to become inoperative.

⚠ WARNING

LOSS OF SAFETY FUNCTION CAUSED BY FOREIGN OBJECTS

Protect the system against contamination by conductive substances.

Failure to follow these instructions can result in death, serious injury, or equipment damage.

The metal surfaces of the product may exceed 70 °C (158 °F) during operation.

⚠ WARNING

HOT SURFACES

- Avoid unprotected contact with hot surfaces.
- Do not allow flammable or heat-sensitive parts in the immediate vicinity of hot surfaces.
- Verify that the heat dissipation is sufficient by performing a test run under maximum load conditions.

Failure to follow these instructions can result in death, serious injury, or equipment damage.

Attaching a Hazard Label with Safety Instructions

Included in the packaging of the drive are adhesive hazard labels in German, French, Italian, Spanish, and Chinese languages. The English version is affixed to the drive by the factory. If the country to which your final machine or process is to be delivered is other than English speaking:

- Select the hazard label suitable for the target country.
  Respect the safety regulations in the target country.
- Attach the hazard label to the front of the device so that it is clearly visible.

Control Cabinet

The control cabinet (enclosure) must have a sufficient size so that all devices and components can be permanently installed and wired in compliance with the EMC requirements.

The ventilation of the control cabinet must be sufficient to comply with the specified ambient conditions for the devices and components operated in the control cabinet.

Install and operate this equipment in a control cabinet rated for its intended environment and secured by a keyed or tooled locking mechanism.

Mounting Distances, Ventilation

When selecting the position of the device in the control cabinet, note the following:

- Mount the device in a vertical position (±10°). This is required for cooling the device.
- Adhere to the minimum installation distances for required cooling. Avoid heat accumulations.
- Do not mount the device close to heat sources.
- Do not mount the device on or near flammable materials.
- The heated airflow from other devices and components must not heat up the air used for cooling the device.

The connection cables of the devices are routed to the top and to the bottom. The minimum distances must be adhered to for air circulation and cable installation.

Mounting distances and air circulation

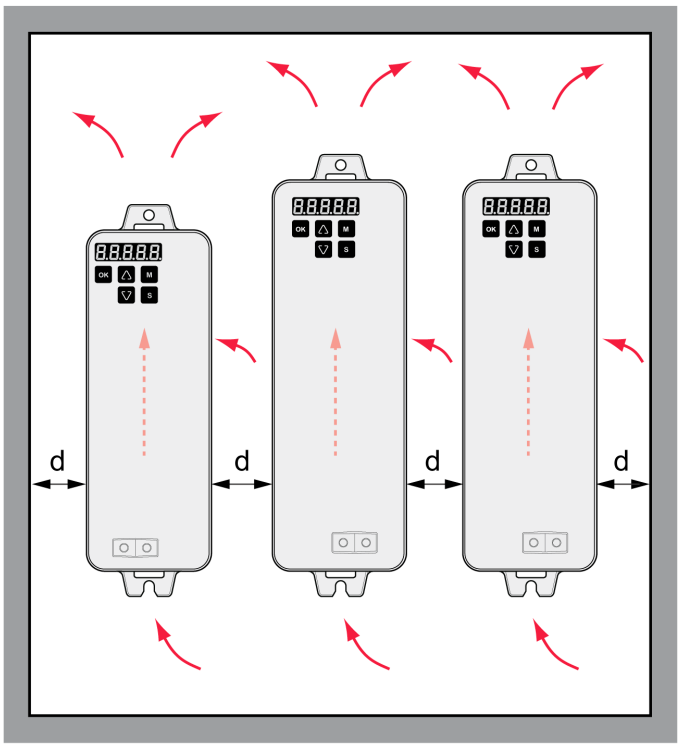

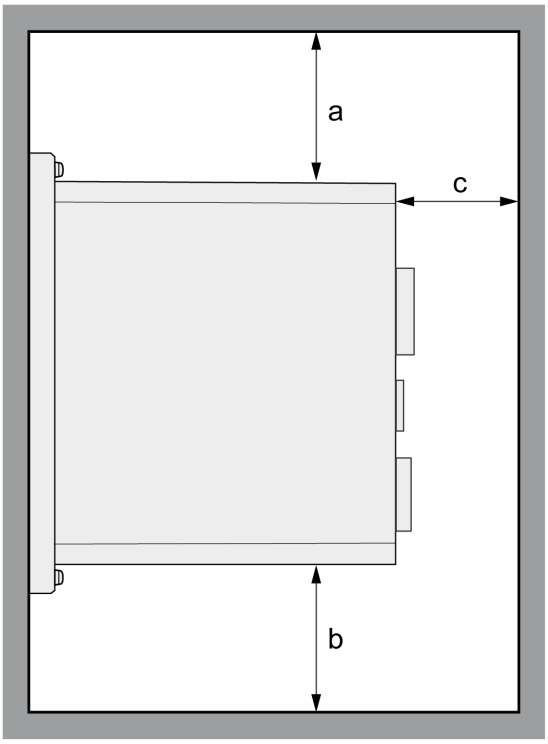

LXM28EUA5, U01, U02, U04, U07, U10, U15, U20, U30, U45

Distance	Unit	Value
Free space a above the device	mm (in)	≥50 (≥1.97)
Free space b below the device	mm (in)	≥50 (≥1.97)
Free space c in front of the device(1)	mm (in)	≥60 (≥2.36)
Free space d between devices	mm (in)	≥15 (≥0.59)
(1) The free space is strictly for observing proper ventilation and may not be sufficient for your wiring requirements.		

Mounting the Drive

For further information on the dimensions of the mounting holes, refer to chapter Dimensions *(see page 41)*.

Painted surfaces may create electrical resistance or isolation. Before mounting the device to a painted mounting plate, remove all paint across a large area of the mounting points.

- Respect the ambient conditions in chapter Environmental Conditions *(see page 39)*.
- Mount the device in a vertical position (±10°).

Electrical Installation Drive

Introduction

⚠ ⚠ DANGER

INSUFFICIENT GROUNDING

- Use a protective ground conductor with at least 10 mm2 (AWG 6) or two protective ground conductors with the cross section of the conductors supplying the power terminals.
- Verify compliance with all local and national electrical code requirements as well as all other applicable regulations with respect to grounding of the entire drive system.
- Ground the drive system before applying voltage.
- Do not use conduits as protective ground conductors; use a protective ground conductor inside the conduit.
- Do not use cable shields as protective ground conductors.
- Keep foreign objects from getting into the product.
- Verify the correct seating of seals and cable entries in order to avoid contamination such as deposits and humidity.

Failure to follow these instructions will result in death or serious injury.

Direct current can be introduced in the protective ground conductor of this drive. If a residual current device (RCD / GFCI) or a residual current monitor (RCM) is used for protection against direct or indirect contact, the following specific types must be used:

⚠ WARNING

DIRECT CURRENT CAN BE INTRODUCED INTO THE PROTECTIVE GROUND CONDUCTOR

- Use a Type A Residual Current Device (RCD / GFCI) or a Residual Current Monitor (RCM) for single-phase drives connected to a phase and to the neutral conductor.
- Use a Type B Residual Current Device (RCD / GFCI) or a Residual Current Monitor (RCM) that has approval for use with frequency inverters and is sensitive to all types of current for three-phase drives and for single-phase drives not connected to a phase and the neutral conductor.

Failure to follow these instructions can result in death, serious injury, or equipment damage.

The entire installation procedure must be performed without voltage present.

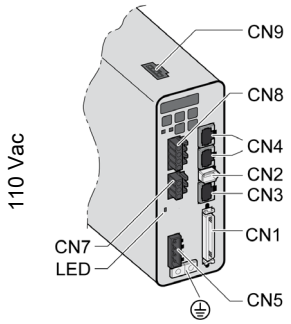

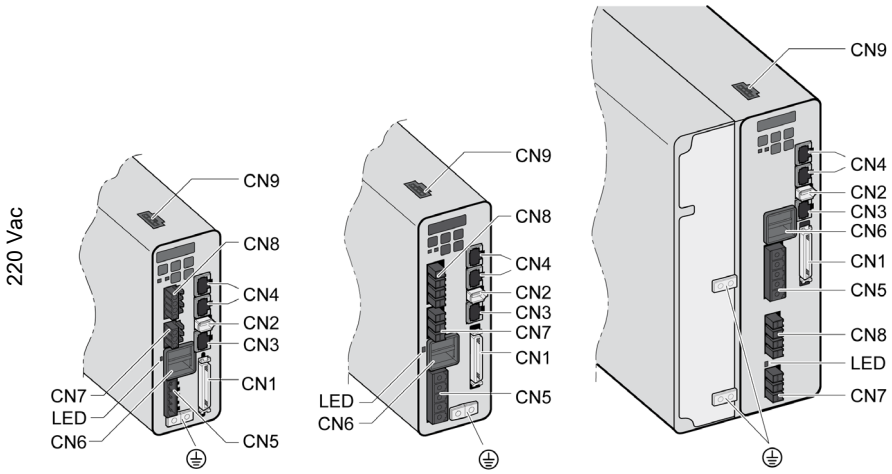

LXM28EUA5 … U15 LXM28EU20 LXM28EU30, U45

Item	Description	Refer to
CN1	Signal interface For connecting master controller or I/O signals.	Connection I/O Interface (CN1) *(see page 139)*
CN2	Connection for motor encoder	Connecting the Motor Encoder (CN2) *(see page 146)*
CN3	Modbus (commissioning interface) For connecting PC via converter TCSMCNAM3M002P	Connection PC (CN3) *(see page 148)*
CN4	2 connections for fieldbus EtherCat For connecting master controller.	Connection Fieldbus (CN4) *(see page 150)*
CN5	Power stage supply (R,S,T) and logic supply (L1, L2)	Connection Logic Supply and Power Stage Supply (CN5) *(see page 152)*
CN6	DC bus connection(1)	Connection DC bus (CN6) *(see page 155)*
LED	DC bus LED The LED is illuminated when mains voltage or internal charge are present. The DC bus LED is not an indicator of the absence of DC bus voltage.	-
CN7	Connection for external braking resistor	Connection braking resistor (CN7) *(see page 156)*
CN8	Motor phases connection (U, V, W, PE)	Connecting the motor phases (CN8) *(see page 158)*
CN9	Connection for safety function STO	Connection STO (CN9) *(see page 162)*
(1) Not available for LXM28E••• M1X drives.		

Connection Grounding Screw

This product has a leakage (touch) current greater than 3.5 mA. If the protective ground connection is interrupted, a hazardous leakage (touch) current may flow if the housing is touched.

⚠ ⚠ DANGER

INSUFFICIENT GROUNDING

- Use a protective ground conductor with at least 10 mm2 (AWG 6) or two protective ground conductors with the cross section of the conductors supplying the power terminals.
- Verify compliance with all local and national electrical code requirements as well as all other applicable regulations with respect to grounding of the entire drive system.
- Ground the drive system before applying voltage.
- Do not use conduits as protective ground conductors; use a protective ground conductor inside the conduit.
- Do not use cable shields as protective ground conductors.
- Keep foreign objects from getting into the product.
- Verify the correct seating of seals and cable entries in order to avoid contamination such as deposits and humidity.

Failure to follow these instructions will result in death or serious injury.

The central grounding screws of the product are located at the front side.

LXM28EUA5…U15

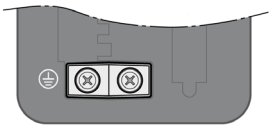

LXM28EU20

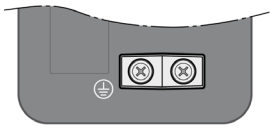

LXM28EU30, U45

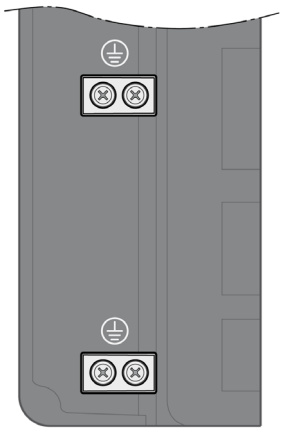

- Use ring-type cable lugs or fork-type cable lugs.
- Connect the ground connection of the device to the equipotential ground plane of your system.

LXM28E	Unit	UA5, U01, U02, U04, U07, U10, U15, U20, U30, U45
Tightening torque of grounding screw	Nm (lb.in)	1.3 (11.5)
Screw type	-	M4 x 8 socket button head screw

Connection I/O Interface (CN1)

The I/O Interface (CN1) is a Sub-D 50-pin female connector. The following table describes the contacts of the connector:

Pin	Signal	Meaning	Pin	Signal	Meaning
1	DO4+	Digital output 4	2	DO3-	Digital output 3
3	DO3+	Digital output 3	4	DO2-	Digital output 2
5	DO2+	Digital output 2	6	DO1-	Digital output 1
7	DO1+	Digital output 1	8	DI4-	Digital input 4
9	DI1-	Digital input 1	10	DI2-	Digital input 2
11	COM	Reference potential to DI1… DI8	12	-	Reserved
13	-	Reserved	14	-	Reserved
15	-	Reserved	16	-	Reserved
17	VDD	24 Vdc power supply (for external I/O)	18	-	Reserved
19	-	Reserved	20	-	Reserved
21	OA	ESIM channel A	22	/OA	ESIM channel A, inverted
23	/OB	ESIM channel B, inverted	24	/OZ	ESIM index pulse, inverted
25	OB	ESIM channel B	26	DO4-	Digital output 4
27	-	Reserved	28	-	Reserved
29	-	Reserved	30	DI8-	Digital input 8
31	DI7-	Digital input 7	32	DI6-	Digital input 6
33	DI5-	Digital input 5	34	DI3-	Digital input 3
35	-	Reserved	36	-	Reserved
37	-	Reserved	38	-	Reserved
39	-	Reserved	40	-	Reserved
41	-	Reserved	42	-	Reserved
43	-	Reserved	44	-	Reserved
45	COM-	Reference potential to VDD and OCZ	46	-	Reserved
47	COM-	Reference potential to VDD and OCZ	48	OCZ	ESIM index pulse Open collector output
49	COM-	Reference potential to VDD and OCZ	50	OZ	ESIM index pulse Line driver output

⚠ WARNING

UNINTENDED EQUIPMENT OPERATION

Do not connect any wiring to reserved, unused connections, or to connections designated as No Connection (N.C.).

Failure to follow these instructions can result in death, serious injury, or equipment damage.

Inputs and Outputs Signals

The following inputs and outputs signals are available:

- Digital outputs (negative logic) *(see page 140)*
- Digital outputs (positive logic) *(see page 141)*
- Digital inputs (negative logic) *(see page 142)*
- Digital inputs (positive logic) *(see page 144)*
- Encoder output signal) *(see page 145)*

Wiring of the Digital Outputs (Negative Logic)

Example of digital outputs DO1 ... DO4 with internal power supply (negative logic):

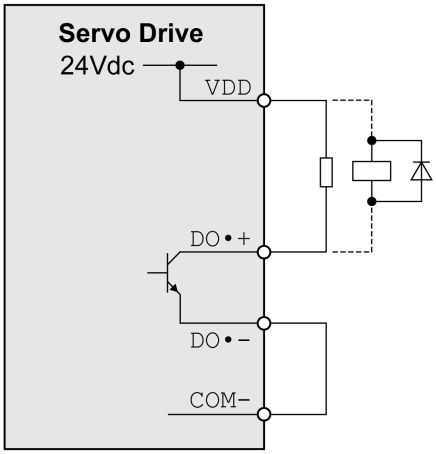

Example of digital outputs DO1 ... DO4 with external power supply (negative logic):

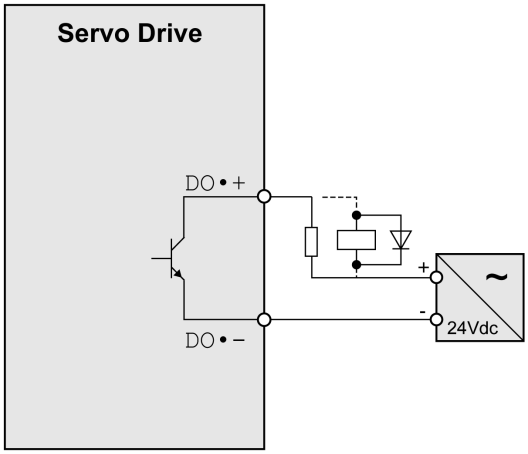

Example of digital output OCZ with internal power supply (negative logic):

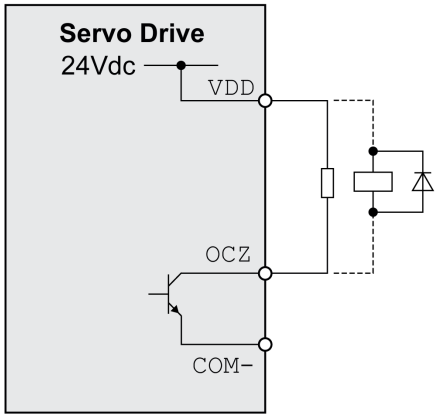

Example of digital output OCZ with external power supply (negative logic):

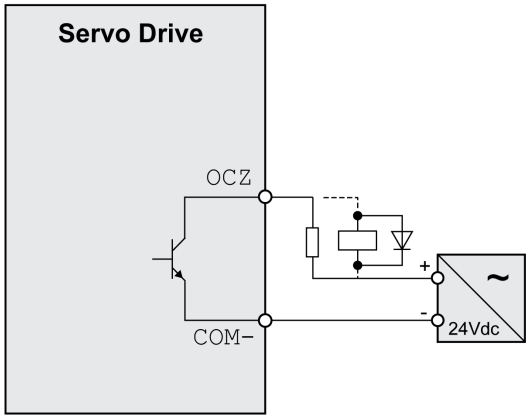

Inductive loads using DC voltages may damage the signal outputs. A protection circuit is required to protect the signal outputs against inductive loads.

⚠ CAUTION

OUTPUT CIRCUIT DAMAGE DUE TO INDUCTIVE LOADS

Use an appropriate external protective circuit or device to reduce the inductive direct current load damage.

Failure to follow these instructions can result in injury or equipment damage.

A diode can be used to protect the signal outputs against inductive loads.

Use a diode with the following ratings:
- Reverse withstand voltage: voltage of signal output times 10
- Forward current: greater than the load current

Wiring of the Digital Outputs (Positive Logic)

Example of digital outputs DO1 ... DO4 with internal power supply (positive logic):

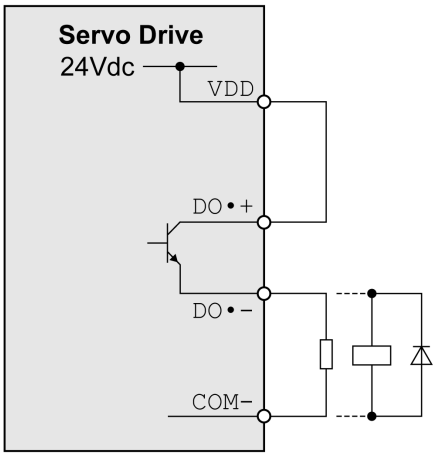

Example of digital outputs DO1 ... DO4 with external power supply (positive logic):

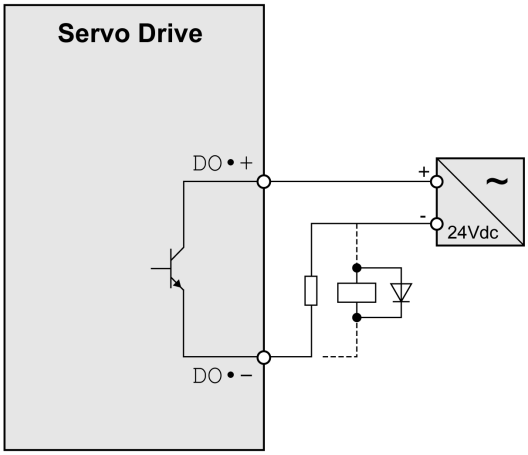

Inductive loads using DC voltages may damage the signal outputs. A protection circuit is required to protect the signal outputs against inductive loads.

⚠ CAUTION

OUTPUT CIRCUIT DAMAGE DUE TO INDUCTIVE LOADS

Use an appropriate external protective circuit or device to reduce the inductive direct current load damage.

Failure to follow these instructions can result in injury or equipment damage.

A diode can be used to protect the signal outputs against inductive loads. Use a diode with the following ratings:

Reverse withstand voltage: voltage of signal output times 10

Forward current: greater than the load current

Wiring of the Digital Inputs (Negative Logic)

⚠ WARNING

UNINTENDED EQUIPMENT OPERATION

Do not connect an external, 24 Vdc power supply to the VDD connection of the I/O interface (CN1) connector.

Failure to follow these instructions can result in death, serious injury, or equipment damage.

Use a relay or an open collector output (NPN transistor) for the input signal.

Example of digital input (negative logic) with internal power supply:

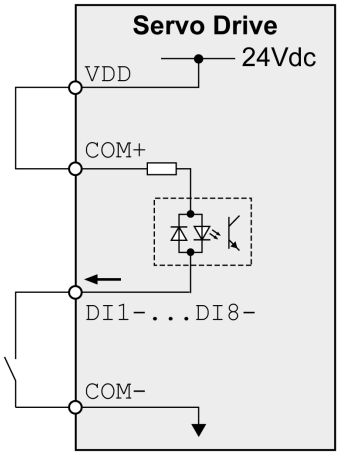

Example of digital input (negative logic) with external power supply:

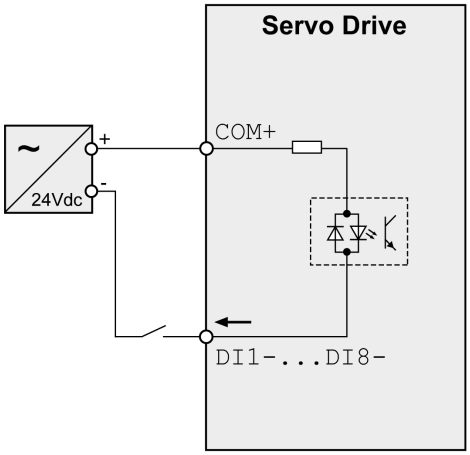

Wiring of the Digital Inputs (Positive Logic)

⚠ WARNING

UNINTENDED EQUIPMENT OPERATION

Do not connect an external, 24 Vdc power supply to the VDD connection of the I/O interface (CN1) connector.

Failure to follow these instructions can result in death, serious injury, or equipment damage.

Use a relay or an open collector output (PNP transistor) for the input signal.

Example of digital input with internal power supply (positive logic):

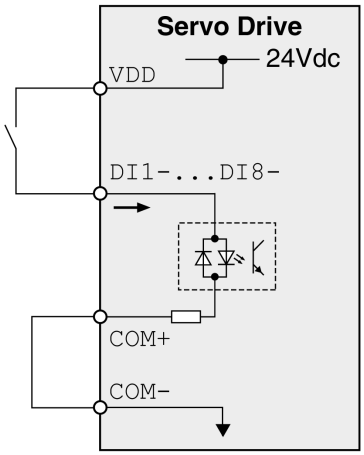

Example of digital input with external power supply (positive logic):

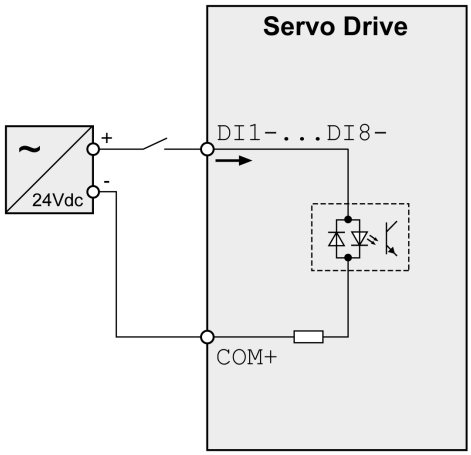

Encoder Output Signal

Example of encoder output signal Line Driver.

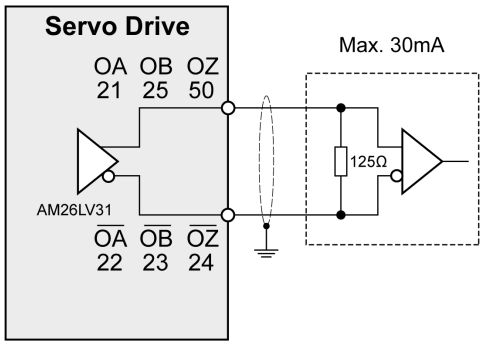

Example of encoder output signal, high-speed optocoupler.

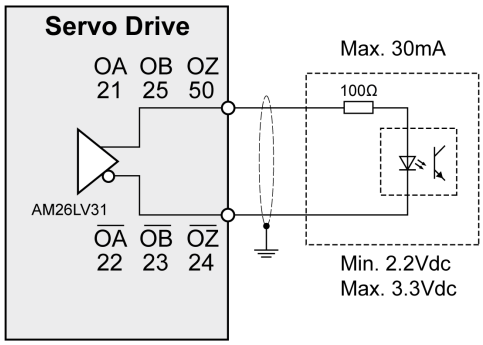

Connecting the Motor Encoder (CN2)

Function and Encoder Type

The motor encoder is an integrated, high-resolution absolute encoder. It provides the device with information on the motor position (analog and digital).

Compatibility between Drive and Motor is defined in the Drive / Motor combinations table *(see page 24)*.

Cable Specifications

For further information, refer to chapter Cables *(see page 104)*.

Shield:	Required, both ends grounded
Twisted Pair:	Required
PELV:	Required
Cable composition:	10 x 0.13 mm^2 (10 x AWG 24)
Maximum cable length:	20 m (65.6 ft)
Special characteristics:	Fieldbus cables are not suitable for connecting encoders.

NOTE: Use pre-assembled cables to reduce the risk of wiring errors.

Wiring Diagram

Connection assignment motor encoder (CN2)

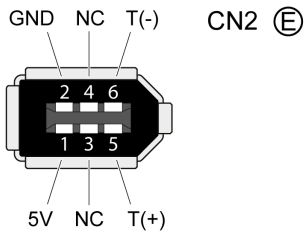

The motor encoder interface (CN2) is a 6-pin connector. The following table describes the contacts of the connector:

Pin	Signal	Color(1)	Meaning	Motor military connector	Motor plastic connector	I/O
5	T+	Blue (BU)	Serial communication	A	1	I/O
6	T-	Blue/Black (BU/BK)		B	4	
1	+5 V	Red, red/white (RD, RD/WH)	5 V encoder supply	S	7	I
2	GND	Black, black/white (BK, BK/WH)	Reference potential for encoder supply	R	8	O
3, 4	N.C.	Reserved	-	-	-	-
(1) Color information relates to the cables available as accessories.						

⚠ WARNING

UNINTENDED EQUIPMENT OPERATION

Do not connect any wiring to reserved, unused connections, or to connections designated as No Connection (N.C.).

Failure to follow these instructions can result in death, serious injury, or equipment damage.

Connecting the Motor Encoder

- Verify that wiring, cables, and connected interface meet the PELV requirements.
- Note the information on EMC, see chapter Electromagnetic Compatibility (EMC) *(see page 100)*. Use equipotential bonding conductors for equipotential bonding.
- Connect the connector to
  - CN2 Encoder if using a motor equipped with a single turn encoder.
  - the battery compartment if using a motor equipped with a multi turn encoder.
- Verify that the connector locks snap in properly at the housing.

Route the cables from the motor and the encoder to the device (starting from the motor). Due to the pre-assembled connectors, this direction is often faster and easier.

Connecting the Battery Compartment When Using a Motor Equipped With a Multi Turn Encoder

The battery compartment is connected to CN2 Encoder, between the drive and the motor encoder cable.

NOTE: The multi turn counting is preserved through power down by the external battery located into the battery compartment.
For further information on the battery replacement, refer to the maintenance of the motor *(see page 329)*.

For LXM28E•••UA5 …U45, the battery compartment should be installed on a baseplate near the drive

Connection PC (CN3)

Function

The commissioning interface (CN3) is an RS-485 connection, supported on an RJ45 connector. If the PC used to connect to the commissioning interface has an RS-485 port, typically supported on a DB9 connector, you can connect it to this connector (RJ45 / DB9 cable). Otherwise, you can use the USB port of the PC with a USB to RS-485 converter.

The commissioning interface may only be used for a point-to-point connection, but not for a point-to-multipoint connection (RS-485 network).

If the commissioning interface at the product is directly connected to an Ethernet interface at the PC, the PC interface may be damaged and rendered inoperable.

NOTICE
INOPERABLE EQUIPMENT Do not directly connect an Ethernet interface to the commissioning interface of this product. **Failure to follow these instructions can result in equipment damage.**

Connecting a PC

A PC with the commissioning software LXM28 DTM Library can be connected for commissioning. The PC is connected via a bidirectional USB/RS485 converter, refer to Accessories and Spare Parts *(see page 90)*.

Cable Specifications

For further information, refer to chapter Cables *(see page 104)*.

Shield:	Required, both ends grounded
Twisted Pair:	Required
PELV:	Required
Cable composition:	8 x 0.25 mm^2 (8 x AWG 22)
Maximum cable length:	100 m (328 ft)
Special characteristics:	-

Wiring Diagram

Wiring diagram PC with commissioning software

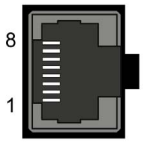

CN3 Modbus

The commissioning interface (CN3) is an RJ45 connector. The following table describes the contacts of the connector:

Pin	Signal	Meaning	I/O
1 ... 3	-	Reserved	-
4	MOD_D1(1)	Bidirectional transmit/receive signal	RS-485 level
5	MOD_D0(1)	Bidirectional transmit/receive signal, inverted	
6 ... 7	-	Reserved	-
8 and connector housing	SHLD	Functional ground / shield - internally connected to ground potential of the drive	-
(1) No polarization.			

⚠ WARNING

UNINTENDED EQUIPMENT OPERATION

Do not connect any wiring to reserved, unused connections, or to connections designated as No Connection (N.C.).

Failure to follow these instructions can result in death, serious injury, or equipment damage.

NOTE: Verify that the connector locks snap in properly at the housing.

Connection Fieldbus (CN4)

Ethernet LED Diagnostic

The following figure shows the dual port/RJ45 connector

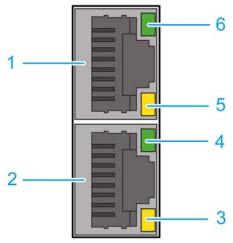

Item	Description
1	(**X1**) RJ45 connector
2	(**X2**) RJ45 connector
3	Ethernet activity LED: ● Off: No link ● Yellow ON: Link at 100 Mbit/s ● Yellow Flashing: Activity at 100 Mbit/s
4	Ethernet link LED: ● Off: No link ● Green ON: Link at 10 Mbit/s ● Green Flashing: Activity at 10 Mbit/s
5	Ethernet activity LED: ● Off: No link ● Yellow ON: Link at 100 Mbit/s ● Yellow Flashing: Activity at 100 Mbit/s
6	Ethernet link LED: ● Off: No link ● Green ON: Link at 10 Mbit/s ● Green Flashing: Activity at 10 Mbit/s

Pin Assignment

The following figure presents the RJ45 Ethernet connector pin assignment:

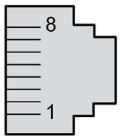

The table provides the pin out details of each RJ45 connector:

Pin	RJ45 signal
1	Tx+: Ethernet transmit line +
2	Tx-: Ethernet transmit line -
3	Rx+: Ethernet receive line +
4	Not connected
5	Not connected
6	Rx-: Ethernet receive line -
7	Not connected
8	Not connected

Cable Specification

- Minimum Cat 5e
- Use equipotential bonding conductors
- Shield: both ends grounded
- Twisted-pair cable
- Cable: 8 x 0.25 mm² (8x AWG 22)
- Use pre-assembled cables to reduce the wiring mistakes
- Verify that wiring, cables, and connected interfaces meet the PELV requirements
- Maximum cable length between devices = 100 m (328 ft)

Use the Schneider Electric cables *(see page 92)*.

Connection Logic Supply and Power Stage Supply (CN5)

This product has a leakage (touch) current greater than 3.5 mA. If the protective ground connection is interrupted, a hazardous leakage (touch) current may flow if the housing is touched.

⚠ ⚠ DANGER

INSUFFICIENT GROUNDING

- Use a protective ground conductor with at least 10 mm2 (AWG 6) or two protective ground conductors with the cross section of the conductors supplying the power terminals.
- Verify compliance with all local and national electrical code requirements as well as all other applicable regulations with respect to grounding of the entire drive system.
- Ground the drive system before applying voltage.
- Do not use conduits as protective ground conductors; use a protective ground conductor inside the conduit.
- Do not use cable shields as protective ground conductors.
- Keep foreign objects from getting into the product.
- Verify the correct seating of seals and cable entries in order to avoid contamination such as deposits and humidity.

Failure to follow these instructions will result in death or serious injury.

⚠ WARNING

INSUFFICIENT PROTECTION AGAINST OVERCURRENT

- Use the external fuses specified in chapter “Technical Data”.
- Do not connect the product to a supply mains whose short-circuit current rating (SCCR) exceeds the value specified in the chapter “Technical Data”.

Failure to follow these instructions can result in death, serious injury, or equipment damage.

⚠ WARNING

INCORRECT MAINS VOLTAGE

Verify that the product is approved for the mains voltage before applying power and configuring the product.

Failure to follow these instructions can result in death, serious injury, or equipment damage.

The equipment, drives and motors, are intended for industrial use and may only be operated with a permanently installed connection.

Prior to connecting the equipment, verify the approved mains types, see chapter Electrical Data Drive *(see page 43)*.

Cable Specifications

Respect the required cable properties in chapter Cables *(see page 104)* and in chapter Electromagnetic Compatibility (EMC) *(see page 100)*.

Shield:	-
Twisted Pair:	-
PELV:	-
Cable composition:	The conductors must have a sufficiently large cross section so that the fuse at the mains connection can trip if required.
Maximum cable length:	3 m (9.84 ft)
Special characteristics:	-

Properties of the Terminals

The terminals are approved for stranded conductors and solid conductors. Use cable ends (ferrules), if possible.

LXM28E	Unit	UA5, U01, U02, U04, U07, U10, U15	U20, U30, U45
Connection cross section	mm^2 (AWG)	0.75 ... 2.5 (20 ... 14)	0.75 ... 6 (20 ... 10)
Stripping length	mm (in)	8 ... 9 (0.31 ... 0.35)	15 (0.59)

Prerequisites for Connecting the Logic Supply

Note the following information:

- Use upstream mains fuses. For further information about fuse types and fuse ratings, refer to chapter Electrical Data Drive *(see page 43)*.
- Note the EMC requirements. Where required, use surge arresters and mains reactors.
- If the length of the mains cable between the external mains filter and the drive exceeds 200 mm (7.87 in), it must be shielded and grounded at both ends.
- For a UL-compliant design, refer to chapter Conditions for UL 508C *(see page 29)*.

Connection Logic Supply

Wiring diagram logic supply LXM28E•••M1X

UA5, U01, U02, U04, U07, U10, U15

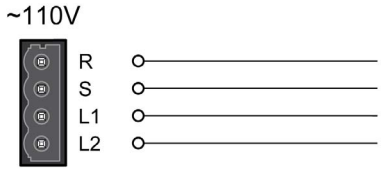

Wiring diagram logic supply LXM28E•••M3X

UA5, U01, U02, U04, U07, U10, U15, U20, U30, U45

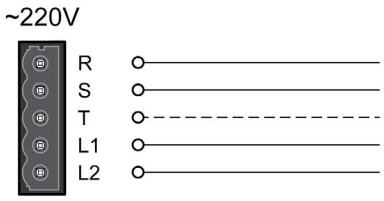

Connection	Meaning
R, S, (T)	Power stage supply
L1, L2	Logic supply

- Verify the type of mains. For the approved types of mains, refer to chapter Electrical Data Drive *(see page 43)*.
- Connect the mains cable.
- Verify that the connector locks snap in properly at the housing.

Wiring Diagram for Devices That Can Be Connected Via a Single-Phase or Three Phases

Drives with a continuous power from 50 W to 1500 W can be connected via a single-phase or via three phases. Drives with a continuous power of more than 1500 W must be connected via three phases.

Wiring diagram for devices that can be connected via a single-phase or three-phases

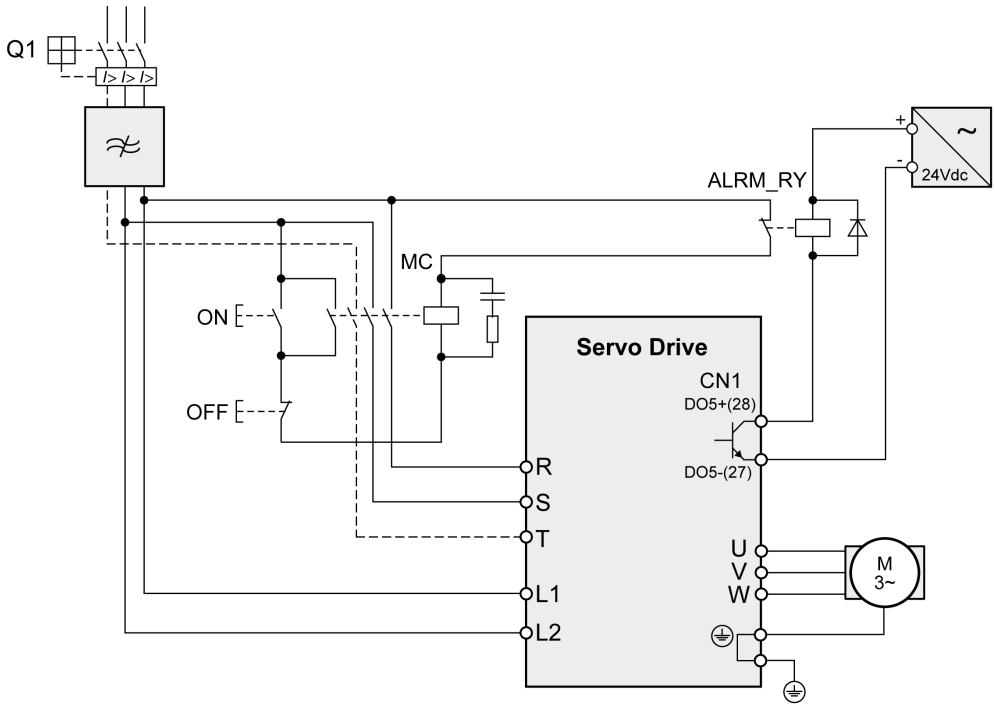

Connection DC Bus (CN6)

Incorrect use of the DC bus may permanently damage the drives either immediately or over time.

⚠ WARNING
INOPERABLE SYSTEM COMPONENTS AND LOSS OF CONTROL Verify that all requirements for using the DC bus are met. **Failure to follow these instructions can result in death, serious injury, or equipment damage.**

This and other important information can be found in the ”LXM28 - Common DC bus - Application note” *(see page 12)*. If you wish to take advantage of DC bus sharing, you must first consult the LXM28 - Common DC bus - Application note for important safety-related information.

Requirements for Use

The requirements and limit values for parallel connection of multiple devices via the DC bus can be found on *www.schneider-electric.com* in the form of an application note (refer to chapter Related Documents *(see page 12)*).

Connection Braking Resistor (CN7)

An insufficiently rated braking resistor can cause overvoltage on the DC bus. Overvoltage on the DC bus causes the power stage to be disabled. The motor is no longer actively decelerated.

⚠ WARNING

UNINTENDED EQUIPMENT OPERATION

- Verify that the braking resistor has a sufficient rating by performing a test run under maximum load conditions.
- Verify that the parameter settings for the braking resistor are correct.

Failure to follow these instructions can result in death, serious injury, or equipment damage.

Internal Braking Resistor

A braking resistor is integrated in the device to absorb braking energy. The drive is shipped with the internal braking resistor active.

External Braking Resistor

An external braking resistor is required for applications in which the motor must be decelerated quickly and the internal braking resistor cannot absorb the excess braking energy.

Selection and rating of the external braking resistor are described in chapter Rating the Braking Resistor *(see page 120)*. For suitable braking resistors, refer to chapter Accessories and Spare Parts *(see page 94)*.

Cable Specifications

For further information, refer to chapter Cables *(see page 104)*.

Shield:	Required, both ends grounded
Twisted Pair:	-
PELV:	-
Cable composition:	Minimum conductor cross section: Same cross section as logic supply. The conductors must have a sufficiently large cross section so that the fuse at the mains connection can trip if required.
Maximum cable length:	3 m (9.84 ft)
Special characteristics:	Temperature resistance

The braking resistors listed in chapter Accessories and Spare Parts *(see page 94)* have a 3-wire, temperature-resistant cable with a length of 0.75 m (2.46 ft) to 3 m (9.84 ft).

Properties of the Terminals (CN7) LXM28EUA5, U01, U02, U04, U07, U10, U15, U20, U30, U45

The terminals are approved for stranded conductors and solid conductors. Use cable ends (ferrules), if possible.

LXM28E	Unit	UA5, U01, U02, U04, U07, U10, U15	U20, U30, U45
Connection cross section	mm^2 (AWG)	0.75 ... 2.5 (20 ... 14)	0.75 ... 6 (20 ... 10)
Stripping length	mm (in)	8 ... 9 (0.31 ... 0.35)	15 (0.59)

The removable terminals are approved for fine-stranded conductors and solid conductors. Respect the maximum permissible connection cross section. Take into account the fact that cable ends (ferrules) increase the conductor cross section.

NOTE: If you use cable ends (ferrules), use only cable ends (ferrules) with collars for these terminals.

Wiring Diagram

Wiring diagram internal braking resistor activated

LXM28EUA5…U45

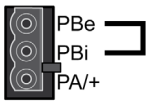

Wiring diagram external braking resistor

LXM28EUA5…U45

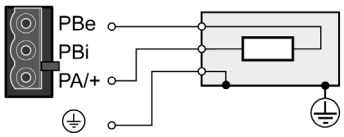

Connecting the External Braking Resistor

- Remove power from all supply voltages. Respect the safety instructions concerning electrical installation.
- Verify that no voltages are present.
- Ground the ground connection (PE) of the braking resistor.
- Connect the external braking resistor to the device.
- Connect a large surface area of the cable shield to the central grounding point of your system.

⚠ DANGER

ELECTRIC SHOCK, EXPLOSION, OR ARC FLASH

- Disconnect all power from all equipment including connected devices prior to removing any covers or doors, or installing or removing any accessories, hardware, cables, or wires.
- Place a "Do Not Turn On" or equivalent hazard label on all power switches and lock them in the non-energized position.
- Wait 15 minutes to allow the residual energy of the DC bus capacitors to discharge.
- Measure the voltage on the DC bus with a properly rated voltage sensing device and verify that the voltage is less than 42.4 Vdc.
- Do not assume that the DC bus is voltage-free when the DC bus LED is off.
- Block the motor shaft to prevent rotation prior to performing any type of work on the drive system.
- Do not create a short-circuit across the DC bus terminals or the DC bus capacitors.
- Replace and secure all covers, accessories, hardware, cables, and wires and confirm that a proper ground connection exists before applying power to the unit.
- Use only the specified voltage when operating this equipment and any associated products.

Failure to follow these instructions will result in death or serious injury.

Connecting the Motor Phases (CN8)

High voltages may be present at the motor connection. The motor itself generates voltage when the motor shaft is rotated. AC voltage can couple voltage to unused conductors in the motor cable.

⚠ ⚠ DANGER

ELECTRIC SHOCK

- Verify that no voltage is present prior to performing any type of work on the drive system.
- Block the motor shaft to prevent rotation prior to performing any type of work on the drive system.
- Insulate both ends of unused conductors of the motor cable.
- Supplement the motor cable grounding conductor with an additional protective ground conductor to the motor housing.
- Verify compliance with all local and national electrical code requirements as well as all other applicable regulations with respect to grounding of all equipment.

Failure to follow these instructions will result in death or serious injury.

Incorrect wiring of the motor connection may cause live wires to be exposed outside of the motor connector below the HMI.

⚠ ⚠ DANGER

ELECTRIC SHOCK CAUSED BY INCORRECT WIRING

- Verify that the protective ground connection (PE) of the device is connected to ground.
- Do not remove the cable end (ferrule) from the protective ground terminal (PE) of the motor connector until you are prepared to wire the protective ground conductor of the motor to the protective ground terminal (PE) of the motor connector.
- Verify that no bare metal of the wires is exposed outside of the motor connector housing when wiring the motor connector.
- Regularly, as part of a maintenance plan, assure that the motor wires are secured in the terminals of the motor connector due to vibration or other influences.

Failure to follow these instructions will result in death or serious injury.

Drive systems may perform unintended movements if unapproved combinations of drive and motor are used. Even if motors are similar, different adjustment of the encoder system may be a source of hazards. Even if the connectors for motor connection and encoder connection match mechanically, this does not imply that the motor is approved for use.

⚠ WARNING

UNINTENDED MOVEMENT

Only use approved combinations of drive and motor.

Failure to follow these instructions can result in death, serious injury, or equipment damage.

Compatibility between Drive and Motor is defined in the Drive / Motor combinations table *(see page 24)*.

Route the cables from the motor and the encoder to the device (starting from the motor). Due to the pre-assembled connectors, this direction is often faster and easier.

Cable Specifications

For further information, refer to chapter Cables *(see page 104)*.

Shield:	Required, both ends grounded
Twisted Pair:	-
PELV:	The wires for the holding brake must be PELV-compliant.
Cable composition:	3 wires for motor phases The conductors must have a sufficiently large cross section so that the fuse at the mains connection can trip if required.
Maximum cable length:	Depends on the required limit values for conducted interference. Category C3: 20 m (65.6 ft)
Special characteristics:	Contains wires for the temperature sensor

Note the following information:

- You may only connect the original motor cable.
- If you do not connect the wires at the motor end, you must isolate each wire individually (inductive voltages).
- Use pre-assembled cables to reduce the risk of wiring errors.

Properties of the Terminals (CN8)

The terminals are approved for stranded conductors and solid conductors. Use cable ends (ferrules), if possible.

LXM28E	Unit	UA5, U01, U02, U04, U07, U10, U15	U20, U30, U45
Connection cross section	mm^2 (AWG)	0.75 ... 2.5 (20 ... 14)	0.75 ... 6 (20 ... 10)
Stripping length	mm (in)	8 ... 9 (0.31 ... 0.35)	15 (0.59)

Monitoring

The drive monitors the motor phases for:

- Short circuit between the motor phases
- Short circuit between the motor phases and ground (Not applicable for LXM28EUA5 … U07 M3X.)

Short circuits between the motor phases and the DC bus, the braking resistor, or the holding brake wires are not detected.

When a short-circuit is detected, power is removed by disabling the power stage. The firmware reports error AL001. Once you have resolved the issue of the over-current, you can re-enable the power stage of the drive.

NOTE: After three successive unsuccessful retries of resetting the power stage, the reset will be blocked for a minimum of one minute.

Wiring Diagram Motor

LXM28EUA5…U45

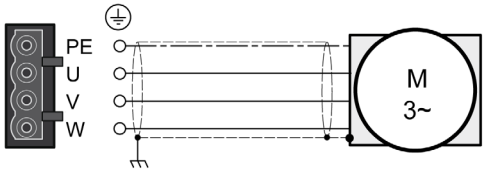

Connection	Meaning	Color(1) (IEC 757)
U	Motor phase	RD
V		WH
W		BK
PE	Protective ground conductor	GN/YE
(1) Color information relates to the cables available as accessories.		

Connecting the Motor Cable

- Note the information on EMC, refer to chapter Electromagnetic Compatibility (EMC) *(see page 100)*.
- Connect the motor phases and protective ground conductor to CN8. Verify that the connections U, V, W, and PE (ground) match at the motor and the device.
- If the product is equipped with removable connectors, Verify that the connector locks snap in properly at the housing.

Holding Brake Connection

The holding brake in the motor has the task of holding the motor position when the power stage is disabled. The holding brake is not a safety function and not a service brake.

A motor with a holding brake requires a suitable holding brake controller which releases the brake when the power stage is enabled and locks the motor shaft when the power stage is disabled.

The holding brake is connected to one of the digital outputs **DO1**…**DO4**. The signal output function BRKR must be assigned to the digital output to which the holding brake is connected. The signal output function BRKR releases the holding brake when the power stage is enabled. When the power stage is disabled, the holding brake is reapplied.

The factory settings for the signal outputs depend on the operating mode, see chapter Setting the Digital Signal Outputs *(see page 270)*. Depending on the operating mode, the signal output function is either assigned to the digital output DO4 or not assigned at all. When you reset the drive to the factory settings with P2-08 = 10, the assignments of the signal output functions are also reset to the factory settings.

When you switch the operating mode using the parameter P1-01 or the signal input functions V-Px and V-T, the signal output functions may also be reset to the factory settings for the new operating mode. If you use the setting D = 0 of parameter P1-01, the assignment of the signal output functions remains the same in the new operating mode.

Resetting the drive to the factory settings or switching the operating mode can modify the assignment of the signal output functions in such a way that the holding brake is released unintentionally.

⚠ WARNING

UNINTENDED EQUIPMENT OPERATION

- Verify that the digital output to which you have assigned the signal output function BRKR has been properly wired and configured.
- Before switching to a different operating mode, verify that the signal output function BRKR for the holding brake will not be assigned to an incorrect digital output in the new operating mode.
- Before resetting the drive to the factory settings, verify that the signal output function BRKR for the holding brake will be assigned to the correct digital output or reassign the signal output function BRKR after the factory reset according to the requirements of your application prior to starting the system.
- In all cases, take all necessary measures to prevent unintended movements of the load caused by a release of the holding brake.

Failure to follow these instructions can result in death, serious injury, or equipment damage.

Example (negative logic) of wiring the holding brake

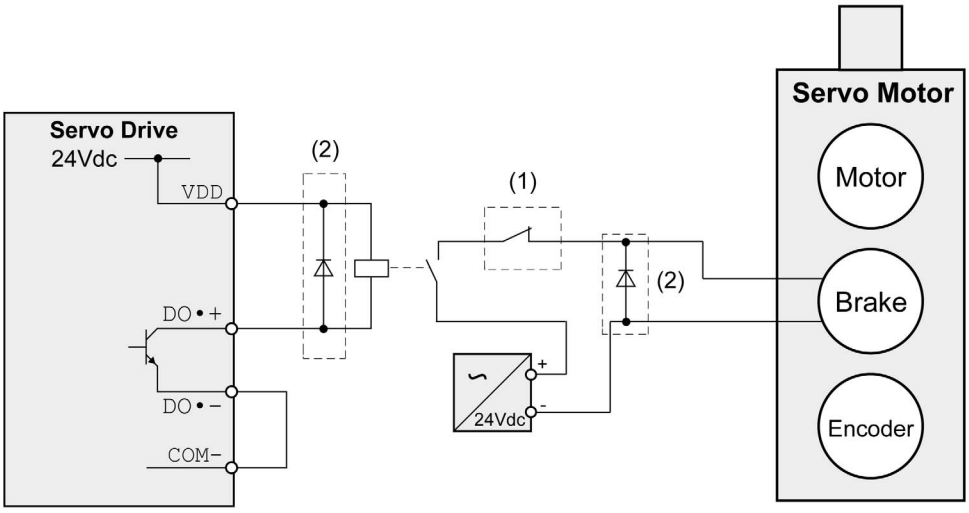

Item	Description
1	Triggering an EMERGENCY STOP should apply the holding brake
2	Flyback diode

Connection STO (CN9)

For important safety information, refer to the chapter Safety Function STO (Safe Torque Off) *(see page 108)* for the requirements for using the safety function STO.

Cable Specifications - Cables Outside of Control Cabinet

Shield:	Yes
Twisted Pair:	Yes
PELV:	Required
Minimum conductor cross section:	2 x 0.34 mm^2 (AWG 22)
Maximum cable length:	30 m (98.4 ft)
Fuse:	4 A

Cable Specifications - Cables Inside Control Cabinet

Shield:	No
Twisted Pair:	No
PELV:	Required
Minimum conductor cross section:	2 x 0.25 mm^2 (AWG 24)
Maximum cable length:	3 m (9.84 ft)
Fuse:	4 A

Properties of the Connection

Connectors housing Connectors crimp contact	Molex 436450400(1) Molex 430300001(1)	
Connection cross section	mm^2 (AWG)	0.25 ... 0.34 (24 ... 22)
(1) Or corresponding equivalent.		

Wiring Diagram

Wiring diagram safety function STO

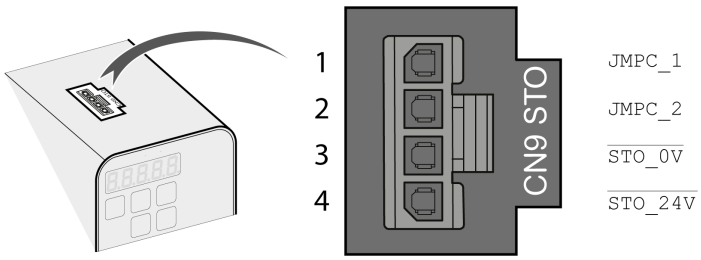

The STO interface (CN9) is a 4-pin female connector. The following table describes the contacts of the connector:

Pin	Signal	Meaning
1	JMPC_1	Jumper connector 1 to be connected to STO_24V if the safety function STO is not used in your application
2	JMPC_2	Jumper connector 2 to be connected to STO_0V if the safety function STO is not used in your application
3	STO_0V	Safety function STO 0 Vdc input(1)
4	STO_24V	Safety function STO 24 Vdc input(1)
(1) PELV power supply is required.		

Connecting the Safety Function STO

- Verify that wiring, cables, and connected interfaces meet the PELV requirements.
- Connect the safety function STO in accordance with the specifications in chapter Safety Function STO (Safe Torque Off) *(see page 108)*.

Deactivating the Safety Function STO

If the safety function STO is not to be used, it must be deactivated. Plug in the jumper for CN9 to bridge pin 1 and pin 4 as well as pin 2 and pin 3 to deactivate the safety function STO. The jumper for CN9 is factory-fitted.

Deactivating the safety function STO

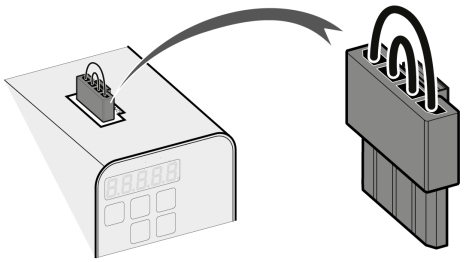

⚠ WARNING

UNINTENDED EQUIPMENT OPERATION

- Remove the jumpers connected to the STO power connector (CN9) only if you intend to use the STO safety-related function for your application.
- Use only an external PELV 24 Vdc power supply unit when applying the safety-related STO function.

Failure to follow these instructions can result in death, serious injury, or equipment damage.

Chapter 10
Motor Installation

What Is in This Chapter?

This chapter contains the following topics:

Topic	Page
Mechanical Installation Motor	166
Connections and Pin Assignments	169
Connection of Motor and Encoder	172
Holding Brake Connection	174

Mechanical Installation Motor

Motors are very heavy relative to their size. The mass of the motor can cause injuries and damage.

⚠ WARNING

HEAVY AND/OR FALLING PARTS

- Use a suitable crane or other suitable lifting gear for mounting the motor if this is required by the weight of the motor.
- Use the necessary personal protective equipment (for example, protective shoes, protective glasses and protective gloves).
- Mount the motor so that it cannot come loose (use of securing screws with appropriate tightening torque), especially in cases of fast acceleration or continuous vibration.

Failure to follow these instructions can result in death, serious injury, or equipment damage.

Motors can generate strong local electrical and magnetic fields. This can cause interference in sensitive devices.

⚠ WARNING

ELECTROMAGNETIC FIELDS

- Keep persons with electronic medical implants, such as pacemakers, away from the motor.
- Do not place electromagnetically sensitive devices in the vicinity of the motor.

Failure to follow these instructions can result in death, serious injury, or equipment damage.

The metal surfaces of the product may exceed 70 °C (158 °F) during operation.

⚠ WARNING

HOT SURFACES

- Avoid unprotected contact with hot surfaces.
- Do not allow flammable or heat-sensitive parts in the immediate vicinity of hot surfaces.
- Verify that the heat dissipation is sufficient by performing a test run under maximum load conditions.

Failure to follow these instructions can result in death, serious injury, or equipment damage.

⚠ CAUTION

IMPROPER APPLICATION OF FORCES

- Do not use the motor as a step to climb into or onto the machine.
- Do not use the motor as a load-bearing part.
- Use hazard labels and guards on your machine to help prevent the improper application of forces on the motor.

Failure to follow these instructions can result in injury or equipment damage.

Mounting Position

The following mounting positions are defined and permissible as per IEC 60034-7:

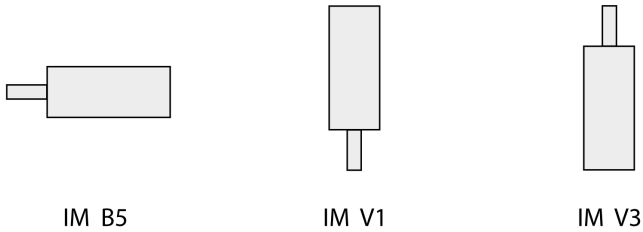

Mounting

When the motor is mounted to the mounting surface, it must be accurately aligned axially and radially and make even contact with the mounting surface. All mounting screws must be tightened with the specified tightening torque. No uneven mechanical load may be applied while the mounting screws are tightened. For data, dimensions, and degrees of protection (IP), refer to chapter Motor *(see page 51)*.

Mounting Situation

NOTICE

FORCES APPLIED TO THE REAR SIDE OF THE MOTOR

- Do not place the motor on the rear side.
- Protect the rear side of the motor from impact.
- Do not lift motors via the rear side.
- Only lift motors equipped with eyebolts via the eyebolts.

Failure to follow these instructions can result in equipment damage.

Special Characteristics BCH2•H, BCH2•M, BCH2•R

Rear side of motor

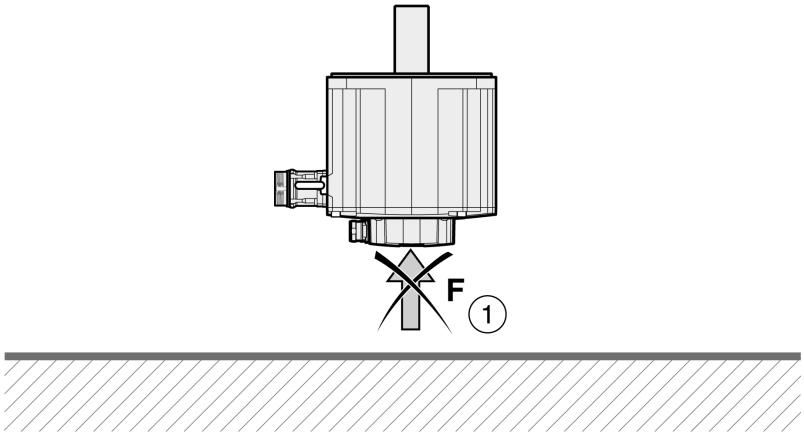

Item	Description
1	Protect the rear side of the motor from application of forces.

Eyebolts BCH2•R

Consider the mass of the product when mounting the motor. It may be necessary to use suitable lifting gear.

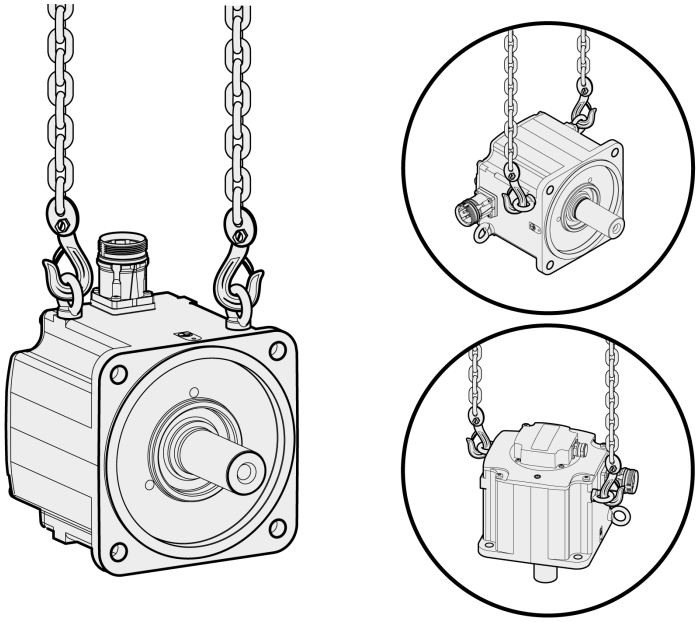

Connections and Pin Assignments

Connection overview

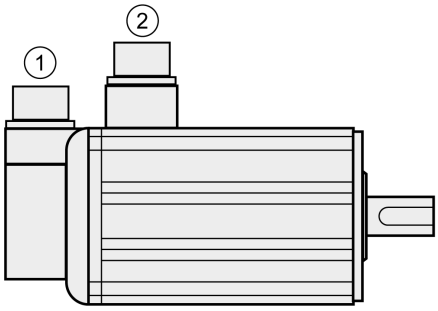

Item	Description
1	Encoder connection
2	Motor connection

Pin Assignment Motor Connection

Pin assignments of motor phases and holding brake

Motor connection plastic connector (type A and type B), drive side:

Motor connection MIL connector (type C and type D), motor side:

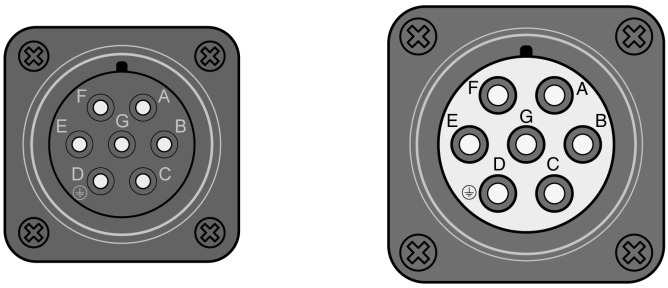

Pin Type A	Pin Type B	Pin Type C and D	Signal	Meaning	Color[1] (IEC 757)
1	1	E	U	Motor phase U	RD
2	2	G	V	Motor phase V	WH
3	4	B	W	Motor phase W	BK
4	5	D	PE	Protective ground (protective earth)	GN/YE
–	3	F	BRAKE_24V	Supply voltage holding brake 24 Vdc	BU
–	6	A	BRAKE_0V	Reference potential holding brake 0 Vdc	BN
–	–	C	–	Reserved	–
(1) Color information relates to the cables available as accessories.					

⚠ WARNING

UNINTENDED EQUIPMENT OPERATION

Do not connect any wiring to reserved, unused connections, or to connections designated as No Connection (N.C.).

Failure to follow these instructions can result in death, serious injury, or equipment damage.

Pin Assignment Encoder Connection

Pin assignment of the encoder.

Encoder connection plastic connector (Type A), drive side:

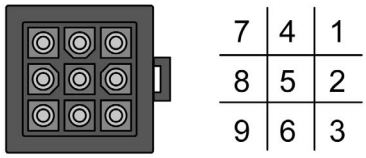

Encoder connection MIL connector (Type B), motor side:

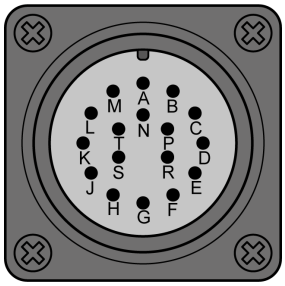

Pin Type A	Pin Type B	Signal	Meaning	Color(1) (IEC 757)
1	A	T+	Data	BU
2	C	–	Reserved	–
3	D	–	Reserved	–
4	B	T-	Data	BU/BK
5	F	Battery +	Battery +(2)	RD
6	G	Battery -	Battery -(2)	BK
7	S	DC+5 V	Supply voltage	RD/WH
8	R	GND	Reference potential	BK/WH
9	L	Shield	Shield	BK
–	E	–	Reserved	–
–	H	–	Reserved	–
–	J	–	Reserved	–
–	K	–	Reserved	–
–	M	–	Reserved	–
–	N	–	Reserved	–
–	P	–	Reserved	–
–	T	–	Reserved	–

(1) Color information relates to the cables available as accessories.
(2) Used with multi turn encoders.

⚠ WARNING

UNINTENDED EQUIPMENT OPERATION

Do not connect any wiring to reserved, unused connections, or to connections designated as No Connection (N.C.).

Failure to follow these instructions can result in death, serious injury, or equipment damage.

Mating Connector

For suitable mating connectors, refer to chapter Connectors and Adapters *(see page 90)*.

Connection of Motor and Encoder

The motor is designed for operation via a drive. Connecting the motor directly to line voltage will damage the motor and can cause fires.

⚠ DANGER

FIRE HAZARD DUE TO INCORRECT CONNECTION

Only connect the motor to a matching, approved drive.

Failure to follow these instructions will result in death or serious injury.

Compatibility between Drive and Motor is defined in the Drive / Motor combinations table *(see page 24)*.

High voltages may be present at the motor connection. The motor itself generates voltage when the motor shaft is rotated. AC voltage can couple voltage to unused conductors in the motor cable.

⚠ ⚠ DANGER

ELECTRIC SHOCK

- Verify that no voltage is present prior to performing any type of work on the drive system.
- Block the motor shaft to prevent rotation prior to performing any type of work on the drive system.
- Insulate both ends of unused conductors of the motor cable.
- Supplement the motor cable grounding conductor with an additional protective ground conductor to the motor housing.
- Verify compliance with all local and national electrical code requirements as well as all other applicable regulations with respect to grounding of all equipment.

Failure to follow these instructions will result in death or serious injury.

Drive systems may perform unintended movements if unapproved combinations of drive and motor are used. Even if motors are similar, different adjustment of the encoder system may be a source of hazards. Even if the connectors for motor connection and encoder connection match mechanically, this does not imply that the motor is approved for use.

⚠ WARNING

UNINTENDED MOVEMENT

Only use approved combinations of drive and motor.

Failure to follow these instructions can result in death, serious injury, or equipment damage.

Compatibility between Drive and Motor is defined in the Drive / Motor combinations table *(see page 24)*.

Protective Ground Conductor Connection

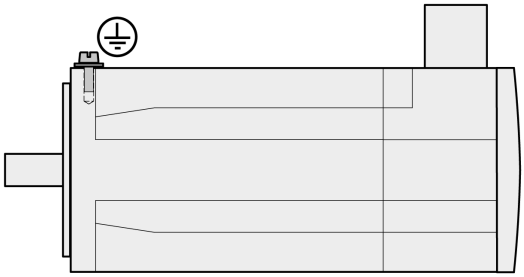

- Ground the motor via a grounding screw if grounding via the flange and the protective ground conductor of the motor cable is not sufficient.
- Use parts with suitable corrosion protection.

Connecting the Cables

Incorrect installation of the cable may destroy the insulation. Broken conductors in the cable or improperly connected connectors may be melted by arcs.

⚠ ⚠ DANGER

ELECTRIC SHOCK, ARC FLASH AND FIRE CAUSED BY INCORRECT INSTALLATION OF THE CABLE

- Disconnect all power before plugging in or unplugging the connectors.
- Verify correct pin assignment of the connectors according to the specifications in this chapter before connecting the cables.
- Verify that the connectors are properly inserted and locked before applying power.
- Avoid forces or movements of the cable at the cable entries.

Failure to follow these instructions will result in death or serious injury.

- Connect the motor cable and the encoder cable to the drive according to the wiring diagram of the drive.
- If your motor is equipped with a holding brake, follow the instructions in chapter Holding Brake Connection *(see page 174)*.

Holding Brake Connection

The holding brake in the motor has the task of holding the motor position when the power stage is disabled. The holding brake is not a safety function and not a service brake.

A motor with a holding brake requires a suitable holding brake controller which releases the brake when the power stage is enabled and locks the motor shaft when the power stage is disabled.

See chapter Holding Brake Connection *(see page 161)* for additional information.

As a result of damage to the insulation of the motor cable, mains voltage may get to the wires for the holding brake.

⚠ ⚠ DANGER

ELECTRICAL SHOCK CAUSED BY DAMAGE TO THE MOTOR CABLE

- Use a PELV power supply for the holding brake.
- Insulate both ends of unused conductors of the motor cable.

Failure to follow these instructions will result in death or serious injury.

When the product is operated for the first time, there is a risk of unanticipated movements caused by, for example, incorrect wiring or unsuitable parameter settings. Releasing the holding brake can cause an unintended movement, for example, lowering of the load in the case of vertical axes.

⚠ WARNING

UNINTENDED MOVEMENT

- Verify that there are no persons or obstacles in the zone of operation when performing a test of the holding brake.
- Take appropriate measures to avoid damage caused by falling or lowering loads or other unintended movements.
- Run initial tests without coupled loads.
- Verify that a functioning emergency stop push-button is within reach of all persons involved in running tests.
- Anticipate movements in unintended directions or oscillations of the motor.

Failure to follow these instructions can result in death, serious injury, or equipment damage.

Cable Specifications

For further information on cable specifications, refer to chapter Cables *(see page 104)*.

Chapter 11
Verifying Installation

Verifying Installation

Verify the mechanical installation of the entire drive system:
- Does the installation meet the specified distance requirements?
- Did you tighten all fastening screws with the specified tightening torque?

Verify the electrical connections and the wiring:
- Did you connect all protective ground conductors?
- Do all fuses have the correct rating; are the fuses of the specified type?
- Did you connect all wires of the cables or insulate them?
- Did you properly connect and install all cables and connectors?
- Are the mechanical locks of the connectors correct and effective?
- Did you properly connect the signal wires?
- Are the required shield connections EMC-compliant?
- Did you take all measures for EMC compliance?
- Does the drive installation conform to all local, regional, and national electrical safety codes for the eventual placement of the equipment?

Verify that all covers and seals of the control cabinet are properly installed to meet the required degree of protection.

Part V
Commissioning

What Is in This Part?

This part contains the following chapters:

Chapter	Chapter Name	Page
12	Overview	179
13	Integrated HMI	183
14	Commissioning Procedure	189
15	Tuning the Control Loops	197

Chapter 12
Overview

What Is in This Chapter?

This chapter contains the following topics:

Topic	Page
General	180
Commissioning Tools	182

General

You must recommission an already configured device if you want to use it under different operating conditions.

The safety function STO (Safe Torque Off) does not remove power from the DC bus. The safety function STO only removes power to the motor. The DC bus voltage and the mains voltage to the drive are still present.

⚠ DANGER

ELECTRIC SHOCK

- Do not use the safety function STO for any other purposes than its intended function.
- Use an appropriate switch, that is not part of the circuit of the safety function STO, to disconnect the drive from the mains power.

Failure to follow these instructions will result in death or serious injury.

Unsuitable settings or unsuitable data may trigger unintended movements, trigger signals, damage parts and disable monitoring functions. Some parameters and other operational data do not become active until after a restart.

⚠ WARNING

UNINTENDED EQUIPMENT OPERATION

- Only start the system if there are no persons or obstructions in the zone of operation.
- Do not operate the drive system with undetermined parameter values.
- Never modify a parameter value unless you fully understand the parameter and all effects of the modification.
- Restart the drive and verify the saved operational data and/or parameter values after modification.
- Carefully run tests for all operating states and potential error situations when commissioning, upgrading or otherwise modifying the operation of the drive.
- Verify the functions after replacing the product and also after making modifications to the parameter values and/or other operational data.

Failure to follow these instructions can result in death, serious injury, or equipment damage.

If the power stage is disabled unintentionally, for example as a result of a power outage, errors or functions, the motor is no longer decelerated in a controlled way.

⚠ WARNING

UNINTENDED EQUIPMENT OPERATION

Verify that movements without braking effect cannot cause injuries or equipment damage.

Failure to follow these instructions can result in death, serious injury, or equipment damage.

Applying the holding brake while the motor is running will cause excessive wear and loss of the braking force.

⚠ WARNING

LOSS OF BRAKING FORCE DUE TO WEAR OR HIGH TEMPERATURE

- Do not use the holding brake as a service brake.
- Do not exceed the maximum number of brake applications and the kinetic energy during braking of moving loads.

Failure to follow these instructions can result in death, serious injury, or equipment damage.

The metal surfaces of the product may exceed 70 °C (158 °F) during operation.

⚠ WARNING

HOT SURFACES

- Avoid unprotected contact with hot surfaces.
- Do not allow flammable or heat-sensitive parts in the immediate vicinity of hot surfaces.
- Verify that the heat dissipation is sufficient by performing a test run under maximum load conditions.

Failure to follow these instructions can result in death, serious injury, or equipment damage.

Rotating parts may cause injuries and may catch clothing or hair. Loose parts or parts that are out of balance may be ejected.

⚠ WARNING

MOVING, UNGUARDED EQUIPMENT

Verify that rotating parts cannot cause injuries or equipment damage.

Failure to follow these instructions can result in death, serious injury, or equipment damage.

When the product is operated for the first time, there is a risk of unanticipated movements caused by, for example, incorrect wiring or unsuitable parameter settings. Releasing the holding brake can cause an unintended movement, for example, lowering of the load in the case of vertical axes.

⚠ WARNING

UNINTENDED MOVEMENT

- Verify that there are no persons or obstacles in the zone of operation when performing a test of the holding brake.
- Take appropriate measures to avoid damage caused by falling or lowering loads or other unintended movements.
- Run initial tests without coupled loads.
- Verify that a functioning emergency stop push-button is within reach of all persons involved in running tests.
- Anticipate movements in unintended directions or oscillations of the motor.

Failure to follow these instructions can result in death, serious injury, or equipment damage.

The product can be accessed via different types of access channels. Simultaneous access via multiple access channels or the use of exclusive access may cause unintended equipment operation.

⚠ WARNING

UNINTENDED EQUIPMENT OPERATION

- Verify that simultaneous access via multiple access channels cannot cause unintended triggering or blocking of commands.
- Verify that the use of exclusive access cannot cause unintended triggering or blocking of commands.
- Verify that the required access channels are available.

Failure to follow these instructions can result in death, serious injury, or equipment damage.

Commissioning Tools

Overview

The following tools *(see page 90)* can be used for commissioning, parameterization, and diagnostics:

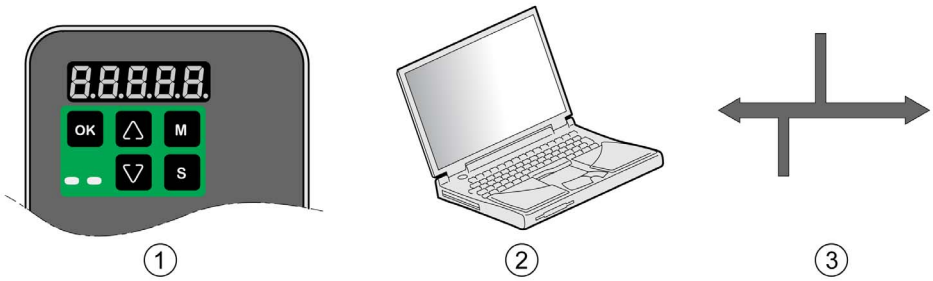

Item	Description
1	Integrated HMI
2	PC with commissioning software LXM28 DTM Library
3	Fieldbus

Device settings can be duplicated. Stored device settings can be transferred to a device of the same type. Duplicating the device settings can be used if multiple devices are to have the same settings, for example, when devices are replaced.

Chapter 13
Integrated HMI

What Is in This Chapter?

This chapter contains the following topics:

Topic	Page
Overview	184
Integrated HMI Structure	185
7-Segment Display	186
Status Information Via the HMI	188

Overview

The integrated HMI allows you to edit parameters, start the operating mode Jog or perform autotuning via the integrated Human-Machine Interface (HMI). Diagnostics information (such as parameter values or error codes) can also be displayed. The individual sections on commissioning and operation include information on whether a function can be carried out via the integrated HMI or whether the commissioning software must be used.

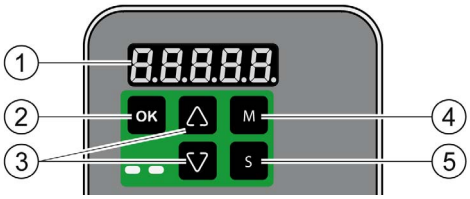

Item	Description
1	5-digit 7-segment display
2	OK key
3	Arrow keys
4	M key
5	S key

Incorrect wiring of the motor connection may cause live wires to be exposed outside of the motor connector below the HMI.

DANGER

ELECTRIC SHOCK CAUSED BY INCORRECT WIRING

- Verify that the protective ground connection (PE) of the device is connected to ground.
- Do not remove the cable end (ferrule) from the protective ground terminal (PE) of the motor connector until you are prepared to wire the protective ground conductor of the motor to the protective ground terminal (PE) of the motor connector.
- Verify that no bare metal of the wires is exposed outside of the motor connector housing when wiring the motor connector.
- Regularly, as part of a maintenance plan, assure that the motor wires are secured in the terminals of the motor connector due to vibration or other influences.

Failure to follow these instructions will result in death or serious injury.

Integrated HMI Structure

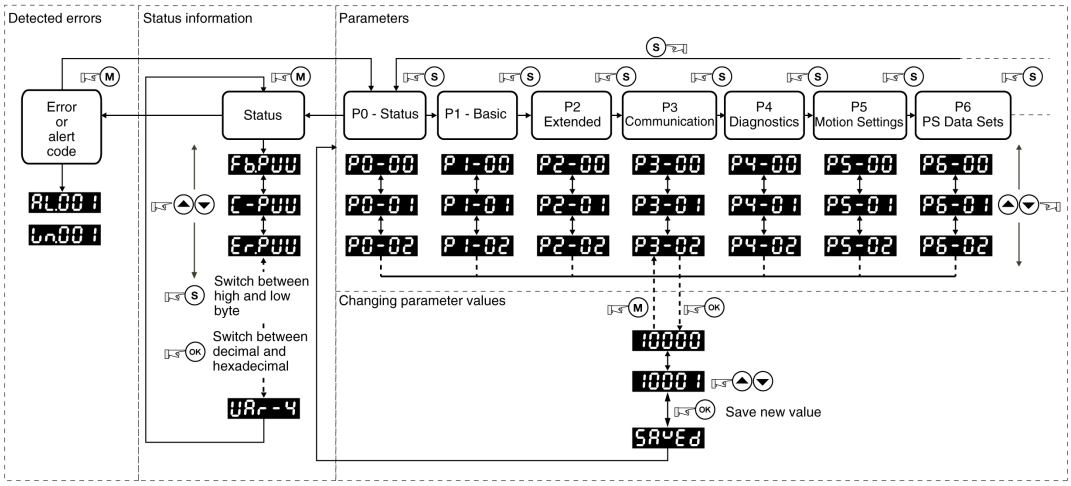

When the drive is powered on, the display shows the name of the selected status information function for approximately one second; after that, it displays the corresponding actual value or status value.

Element	Function
HMI display	The 5-digit 7-segment display shows actual values, parameter settings, status information, and error codes.
M key	The **M** key lets you switch between the type of information displayed: status information/actual values, error codes, and parameters. If an error is detected, the display shows the error code. If you press the **M** while the error is active, you can display other information; however, after approximately 20 seconds without interaction, the error code is displayed again.
S key	The **S** lets you scroll through the parameter groups. After you have selected a parameter and its value is displayed, you can use the **S** key to move the cursor to the left. The digit at the current cursor position flashes. The arrow keys let you change the value at the current cursor position.
Arrow keys	The arrow keys let you scroll through the actual values/status information and the parameters within a parameter group. Use the arrow keys to increase or decrease values.
OK key	After you have selected a parameter, press the **OK** key to display the current parameter value. The arrow keys let you change the displayed value. Pressing the **OK** key again saves the value.

7-Segment Display

Saving Settings

If you set a new parameter value and press the **OK** key, a message is displayed for approximately one second to provide feedback.

7-segment display	Description
SAuEd	The new parameter value was successfully saved.
r-OLY	The parameter value is a read-only value and cannot be saved (Read-Only).
Prot	Changing a parameter value requires exclusive access. See chapter Access Channels *(see page 266)*.
Out-r	The new parameter value is outside the permissible value range (Out of range).
SruOn	The new parameter value can only be saved when the power stage is disabled (Servo On).
Po-On	The new parameter value becomes active the next time the product is powered on (Power On).
Error	Displayed whenever a value you have entered for a parameter is, for various reasons, rejected by the drive.

Representation of Numerical Values on the 7-Segment Display

The illustration below shows the decimal representation of a 16-bit value and a 32-bit value as a positive value and as a negative value each.

Example of representation of decimal values

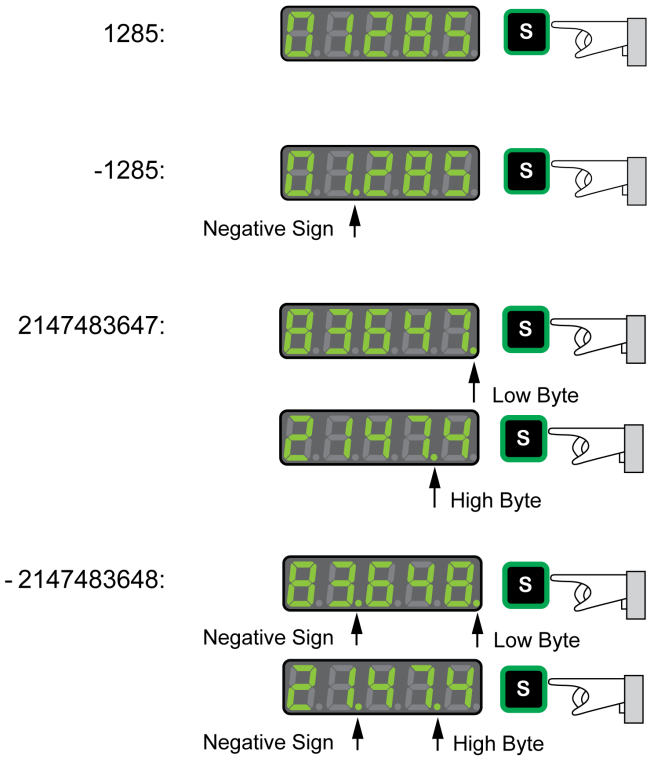

Example of representation of hexadecimal values

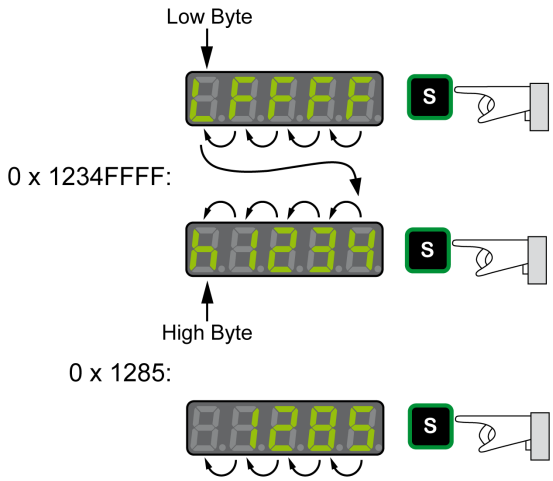

Changing the Sign Via the 7-Segment Display

7-segment display	Description
24680 24. 680 ?343E ?CbC2	You can change the sign of a value by holding down the **S** key for a period of more than 2 seconds. Negative decimal values are represented with a dot between the second and the third position. Negative hexadecimal values are represented as a two's complement.

Alert Messages and Error Messages on the 7-Segment Display

7-segment display	Description
?nnnn	If an alert condition is detected, **Wnnnn** is displayed. **Win** identifies the code as an alert. The subsequent 3 digit **nnn** represent the number of the alert. For a list of alert codes, refer to Alert Codes and Error Codes *(see page 314)*.
ALnnn	If an error is detected **ALnnn** is displayed. **AL** identifies the code as a detected error. The subsequent 3 digit **nnn** represent the error number. For a list of error codes, refer to Alert Codes and Error Codes *(see page 314)*.
S?OP	The display shows **STOP** if exclusive access is enableds while the power stage is still enabled. For further information on access channels, refer to Access Channels *(see page 266)*.

Status Information Via the HMI

After you have powered on the drive, status information is displayed via the HMI. Use the parameter P0-02 to select the type of status information to be displayed. For example, if you set the parameter P0-02 to the value 7, the speed of rotation of the motor after is displayed after you have powered on the drive.

Setting P0-02	Description
0	Actual position (with gear ratio applied) in the unit PUU
1	Target position (with gear ratio applied) in the unit PUU
2	Deviation between actual position and target position (with gear ratio applied) in the unit PUU
3	Actual position in motor increments (1280000 pulses/revolution)
4	Target position in motor increments (1280000 pulses/revolution)
5	Deviation between actual position and target position in motor increments (1280000 pulses/revolution)
6	Reference value in kilopulses per second (kpps)
7	Actual velocity in rpm
8	Voltage for target velocity in V
9	Target velocity in rpm
10	Voltage for target torque in V
11	Target torque in percent of continuous motor current
12	Average load of the motor in percent of continuous motor current (The sampling window duration is specified via parameter P4-29)
13	Peak load of the motor since the last power cycle of the drive in percent of continuous motor current (maximum value of occurring in setting 12 since last power cycle)
14	Mains voltage in V
15	Ratio of load inertia and motor inertia (divided by 10)
16	Power stage temperature in degrees Celsius (°C)
17	Resonance frequency in Hz
18	Absolute pulse number relative to encoder
19	Mapping parameter 1: Content of parameter P0-25 (mapping target is specified via parameter P0-35)
20	Mapping parameter 2: Content of parameter P0-26 (mapping target is specified via parameter P0-36)
21	Mapping parameter 3: Content of parameter P0-27 (mapping target is specified via parameter P0-37)
22	Mapping parameter 4: Content of parameter P0-28 (mapping target is specified via parameter P0-38)
23	Status indication 1: Content of parameter P0-09 (the status information to be displayed is specified by parameter P0-17)
24	Status indication 2: Content of parameter P0-10 (the status information to be displayed is specified by parameter P0-18)
25	Status indication 3: Content of parameter P0-11 (the status information to be displayed is specified by parameter P0-19)
26	Status indication 4: Content of parameter P0-12 (the status information to be displayed is specified by parameter P0-20)
27	Reserved
39	Status of digital inputs (content of P4-07)
40	Status of digital outputs (content of P4-09)
41	Drive status (content of P0-46)
42	Operating mode (content of P1-01)
50	Target velocity in rpm
53	Target torque in 0.1 percent of the nominal torque
54	Actual torque in 0.1 percent of the nominal torque
55	Actual torque in 0.01 A
96	Firmware version and firmware revision of drive (P0-00 and P5-00)
111	Number of detected errors

Chapter 14
Commissioning Procedure

What Is in This Chapter?

This chapter contains the following topics:

Topic	Page
Commissioning Software	190
Setting the Device Address, Baud Rate and Connection Settings	191
Verifying the Direction of Movement	193
Verifying the Safety Function STO	195

Commissioning Software

The commissioning software LXM28 DTM Library has a graphic user interface and is used for commissioning, diagnostics, and testing settings.

Online Help

The commissioning software offers help functions, which can be accessed via **? - Help Topics** or by pressing the F1 key.

Source of Commissioning Software

The latest version of the commissioning software LXM28 DTM Library is available for download from the Internet.

http://www.schneider-electric.com

Setting the Device Address, Baud Rate and Connection Settings

Each device is identified by a unique address. Each device must have its own unique node address, which may only be assigned once in the network. The transmission rate (baud rate) must be the same for all devices in the network.

Use the parameter `P3-00` to set the Modbus device address.

Use the parameter `P3-05` to set the Ethernet device address.

Use the parameter `P3-01` to set the Modbus baud rate.

Use the parameter `P3-02` to set the connection settings.

Setting the baud rate:

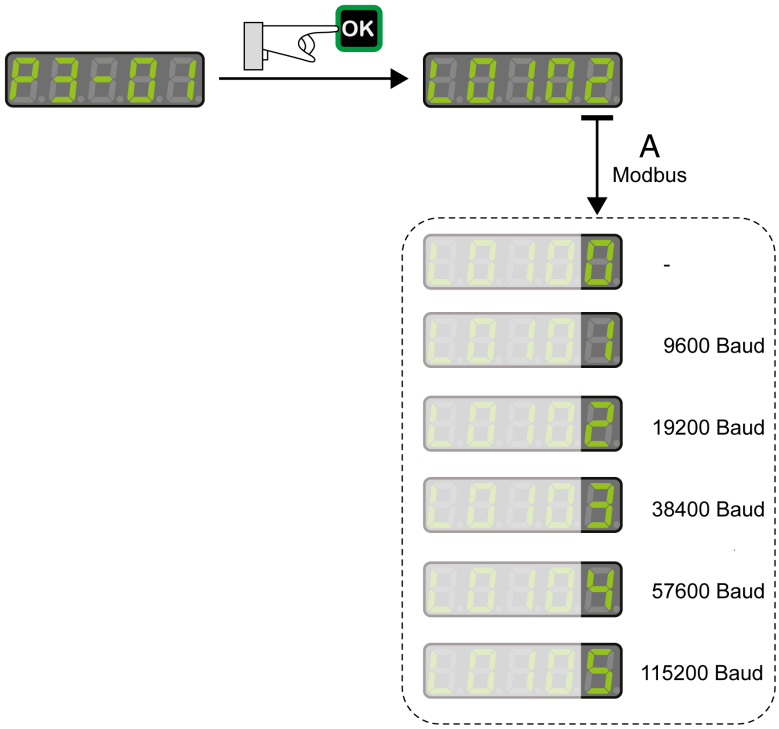

Modbus Connection Settings

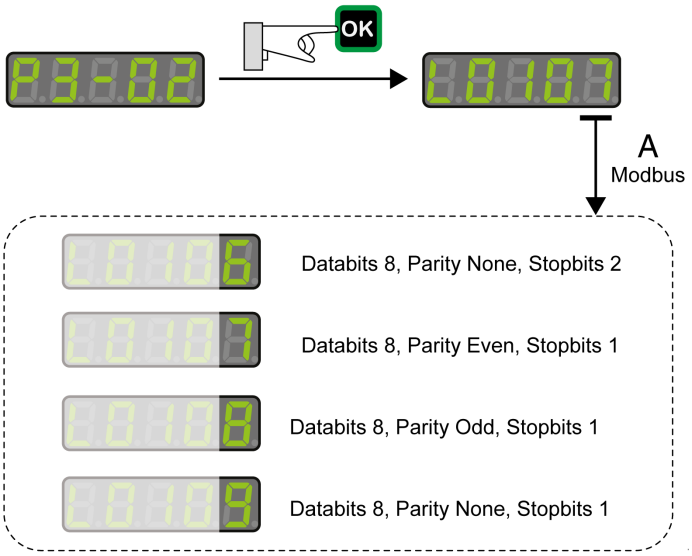

⚠ WARNING

UNINTENDED EQUIPMENT OPERATION

- Verify that there is only one master controller configured on the network or remote link.
- Verify that all devices have unique addresses.
- Confirm that the device address is unique before placing the system into service.

Failure to follow these instructions can result in death, serious injury, or equipment damage.

Parameter name	Description	Unit Minimum value Factory setting Maximum value HMI Format	Data type R/W Persistent	Parameter address via fieldbus
P3-00 ADR	Device Address Modbus The device address must be unique. Modified settings become active the next time the product is powered on.	- 1 127 247 Decimal	u16 RW per.	Modbus 400_h EtherCAT 4300_h
P3-01 BRT	Transmission Rate This parameter is used to set the data transmission rate. Modified settings become active the next time the product is powered on.	- 0_h 102_h 405_h Hexadecimal	u16 RW per.	Modbus 402_h EtherCAT 4301_h
P3-02 PTL	Modbus Connection Settings This parameter specifies the Modbus connection settings. Modified settings become active the next time the product is powered on.	- 6_h 7_h 9_h Hexadecimal	u16 RW per.	Modbus 404_h EtherCAT 4302_h
P3-03 FLT	Detected Modbus Communication Errors - Handling This parameter specifies the response of the drive to a detected communication error. Value 0: Detected alert Value 1: Detected error	- 0_h 0_h 1_h Hexadecimal	u16 RW per.	Modbus 406_h EtherCAT 4303_h
P3-04 CWD	Modbus Connection Monitoring This parameter specifies the maximum permissible duration for communication timeout. When this time has elapsed, the communication timeout is treated as a detected error. Setting this parameter to 0 to disables connection monitoring.	ms 0 0 20000 Decimal	u16 RW per.	Modbus 408_h EtherCAT 4304_h
P3-05 CMM	Device Address Integrated Fieldbus This parameter specifies the Ethernet address of the drive in decimal format. The device address must be unique. Change to this parameter becomes effective only after a restart of the drive. Modified settings become active the next time the product is powered on.	- 0 0 127 Decimal	u16 RW per.	Modbus $40A_h$ EtherCAT 4305_h
P3-07 CDT	Modbus Response Delay Time This parameter specifies the time delay with which the drive responds to the Modbus master.	0.5 ms 0 0 1000 Decimal	u16 RW per.	Modbus $40E_h$ EtherCAT 4307_h

Verifying the Direction of Movement

Direction of Movement

⚠ WARNING

UNINTENDED MOVEMENT CAUSED BY INTERCHANGED MOTOR PHASES

Do not interchange the motor phases.

Failure to follow these instructions can result in death, serious injury, or equipment damage.

If your application requires an inversion of the direction of movement, you may parameterize the direction of movement.

Movements are made in positive or in negative directions.

Definition of the direction of movement: Positive direction of movement is when the motor shaft rotates counterclockwise as you look at the end of the protruding motor shaft.

Direction of movement with factory settings

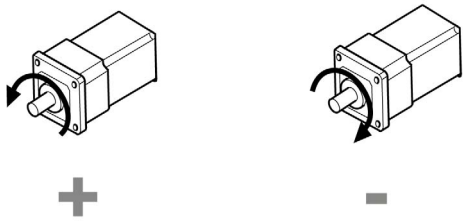

Verifying the Direction of Movement

- Start the operating mode Jog. (HMI: P4-05)
  The HMI displays the velocity in the unit rpm for the operating mode JOG.
- Set a velocity suitable for your application and conform with the OK key.
  The HMI displays JOG.

Movement in positive direction:

- Press the **Up Arrow** key.
  A movement is made in positive direction.

Movement in negative direction:

- Press the **Down Arrow** key.
  A movement is made in negative direction.

Press the M key to terminate the operating mode Jog.

Changing the Direction of Movement

If the expected direction of movement and the actual direction of movement are not identical, you can invert the direction of movement.

- Inversion of direction of movement is not activated:
  Movements are made in positive direction with positive target values.
- Inversion of direction of movement is activated:
  Movements are made in positive direction with negative target values.

The parameter `P1-01` C = 1 allows you to invert the direction of movement.

Changing the direction of movement

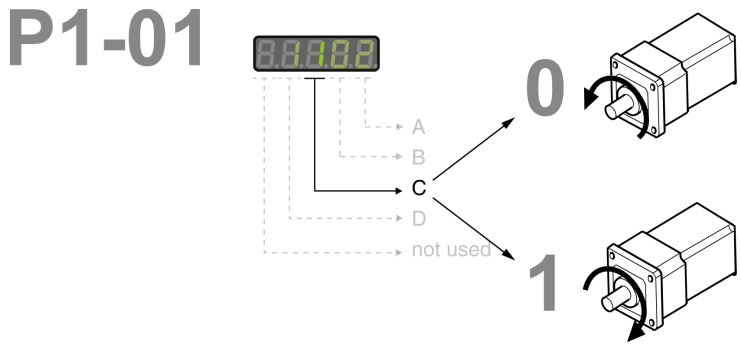

Verifying the Safety Function STO

The safety function STO must be tested at least once per year.

Procedure:

- Operate the system with the nominal voltage at the STO inputs as described in the chapter Inputs / Outputs Characteristics *(see page 49)*.
- Enable the power stage (operating state 6 Operation Enabled).
- Trigger the safety function STO by switching off the voltage (for example, via an emergency stop push-button).
  The power stage is disabled and the error message AL501 is displayed.
- Verify that drive is in the operating state Fault.
- Check whether the drive can be set to the operating state 6 Operation Enabled.
  The drive remains in the operating state Fault.
- Restore the STO voltage at the signal inputs of the safety function STO and trigger a Fault Reset.
- Verify that the drive can be set to the operating state 6 Operation Enabled.
  The drive is set to the operating state 6 Operation Enabled. Movements are possible again.

Chapter 15
Tuning the Control Loops

What Is in This Chapter?

This chapter contains the following topics:

Topic	Page
Tuning the Control Loops	198
Easy Tuning	199
Comfort Tuning	200
Manual Tuning	205

Tuning the Control Loops

Autotuning and manual tuning move the motor in order to tune the control loops. Incorrect parameters may cause unintended movements or the loss of monitoring functions.

⚠ WARNING

UNINTENDED MOVEMENT

- Only start the system if there are no persons or obstructions in the zone of operation.
- Verify that the values for the parameters `P9-26` and `P9-27` do not exceed the available movement range.
- Verify that the parameterized movement ranges are available.
- In determining the available movement range, consider the additional distance for the deceleration ramp in the case of an EMERGENCY STOP.
- Verify that the parameter settings for a Quick Stop are correct.
- Verify correct operation of the limit switches.
- Verify that a functioning emergency stop push-button is within reach of all persons involved in the operation.

Failure to follow these instructions can result in death, serious injury, or equipment damage.

Autotuning adapts the control performance of the drive to the mechanical system used and optimizes the control loop settings appropriately. External factors such as a load at the motor are considered. The control loop settings can also be optimized by using manual tuning.

Two autotuning methods and manual tuning are provided for control loop optimization:

- Easy Tuning: This type of autotuning is performed without user intervention. For most applications, Easy Tuning yields good, highly dynamic results.
- Comfort Tuning: This type of autotuning is performed with user intervention. You can select optimization criteria and set parameters for movement, direction, and velocity.
- Manual Tuning: This type of tuning allows you to perform test movements and optimize the control loop settings using the Scope function.

Easy Tuning

Easy Tuning is started via the HMI or the commissioning software LXM28 DTM Library.

Easy Tuning requires an available movement range of 5 revolutions. During Easy Tuning, movements of 2.5 revolutions are performed in positive direction of movement and 2.5 revolutions in negative direction of movement. If this movement range is not available, you must use Comfort Tuning.

Easy Tuning can be used for a ratio of motor inertia to load inertia of up to 1:50.

Performing Easy Tuning

Set the parameter P2-32 to 1 to perform Easy Tuning.

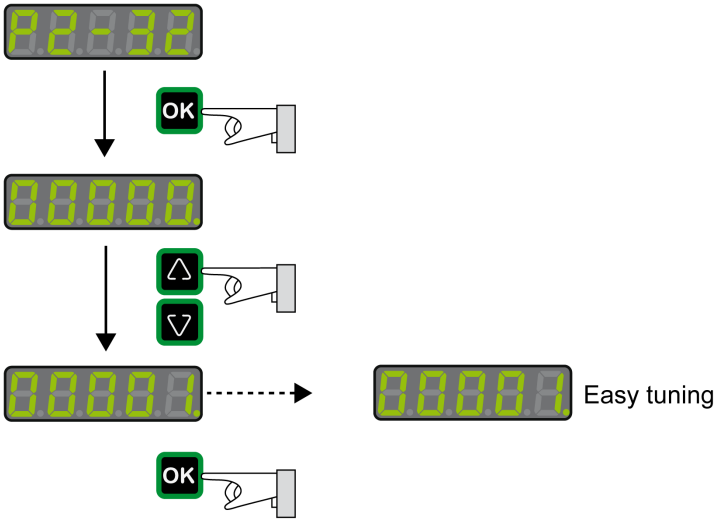

After you have started Easy Tuning via P2-32, the display of the HMI shows the progress as a percentage from `tn000` to `tn100`.

Press the **M** button of the HMI to cancel autotuning.

If autotuning completes successfully, the display of the HMI shows the message `done`.

Press the **OK** key of the HMI to save the control loop parameters. The display of the HMI briefly shows the message `saved`.

Press the **M** key of the HMI to discard the autotuning results.

If autotuning does not complete successfully, the display of the HMI shows the message `ERROR`. The cause can be read with the parameter P9-30.

The parameter P9-37 provides additional information on the last event that occurred during autotuning.

Comfort Tuning

Comfort Tuning allows you to select optimization criteria and set values for the movement.

Optimization Criteria for Comfort Tuning

Comfort Tuning allows you to select an optimization criterion for autotuning. The following optimization criteria are available:

- Optimization of the control loop parameters for minimum settling time with vibration suppression
- Optimization of the control loop parameters for minimum overshoot with vibration suppression
- Optimization of the control loop parameters for minimum settling time without vibration suppression
- Optimization of the control loop parameters for minimum overshoot without vibration suppression

The illustration below shows optimization for minimum overshoot and optimization for minimum settling time.

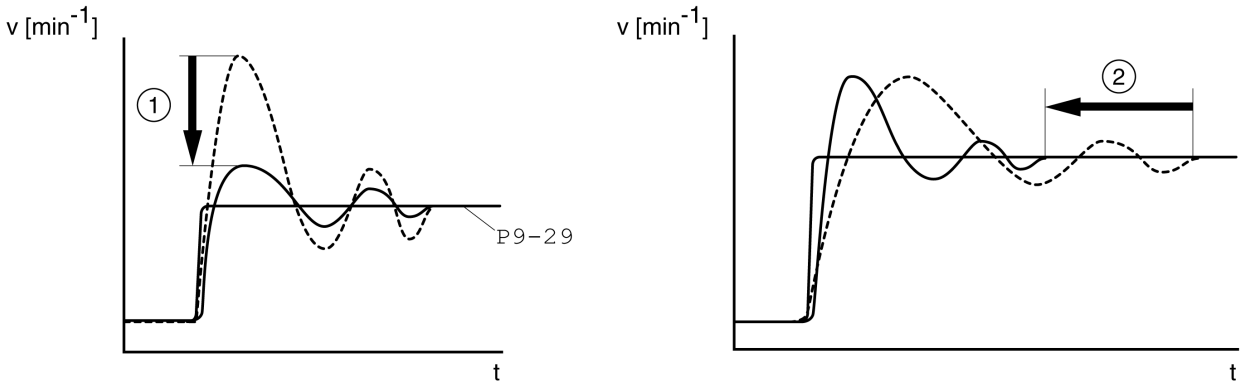

Item	Description
1	Optimization for minimum overshoot
2	Optimization for minimum settling time

Vibration suppression compensates resonance frequencies of the mechanical system. The option Vibration Suppression is available for both optimization criteria.

Parameters for the Movement for Comfort Tuning

The following settings must be made for Comfort Tuning:

- Direction of movement
- Velocity
- Acceleration and deceleration
- Movement range
- Smoothing

These values must be as close as possible to the values used in the actual application. If you enter implausible values, Comfort Tuning is canceled.

Setting the Direction of Movement

Set the direction of movement via the parameter P9-20.

Parameter name	Description	Unit Minimum value Factory setting Maximum value HMI Format	Data type R/W Persistent	Parameter address via fieldbus
P9-20 LTNCYCLE	Autotuning - Direction of Movement This parameter sets the direction of movement for autotuning. Value 0: Both directions of movement Value 2: One direction of movement	- 0 0 3 Decimal	s16 RW -	Modbus $A28_h$ EtherCAT 4914_h

Setting the Velocity

Set the velocity via the parameter P9-29.

The velocity must be between 10 ... 100 % of the nominal velocity n_N.

Parameter name	Description	Unit Minimum value Factory setting Maximum value HMI Format	Data type R/W Persistent	Parameter address via fieldbus
P9-29 LTNVCRUISE	Autotuning - Velocity Bits 0 … 15: Velocity for positive direction of movement Bits 16 … 31: Velocity for negative direction of movement	0.1rpm|0.1rpm - - - Decimal	u32 RW -	Modbus $A3A_h$ EtherCAT $491D_h$

Setting Acceleration and Deceleration

Set the acceleration and the deceleration with the P9-31 parameter.

The value for the acceleration and the value for the deceleration must be between t_{min} and t_{max}:

$$t_{min} = \frac{100}{90} 20\pi \frac{J_M + J_{load}}{M_{max}} \qquad t_{max} = \frac{100}{33} 20\pi \frac{J_M + J_{load}}{M_N}$$

J_M = Moment of inertia of the motor in kg cm^2

J_{load} = Moment of inertia of the load in kg cm^2

M_{max} = Peak torque in Nm

M_N = Nominal torque in Nm

Parameter name	Description	Unit Minimum value Factory setting Maximum value HMI Format	Data type R/W Persistent	Parameter address via fieldbus
P9-31 PTACCDEC	Autotuning - Acceleration and Deceleration Bits 0 … 15: Acceleration for Autotuning Bits 16 … 31: Deceleration for Autotuning	ms|ms 6| 6 6000| 6000 65500| 65500 Decimal	u32 RW -	Modbus $A3E_h$ EtherCAT $491F_h$

Setting the Movement Range

Set the movement range via parameters P9-26 and P9-27.

The movement range must be sufficiently large to allow for a constant movement at the set speed in addition to the acceleration phase and the deceleration phase.

Parameter name	Description	Unit Minimum value Factory setting Maximum value HMI Format	Data type R/W Persistent	Parameter address via fieldbus
P9-26 PTPOS	Autotuning - Movement Range in Direction 1 This parameter specifies the movement range for autotuning in direction of movement 1. The sign of the value determines the direction of movement: Positive value: Positive direction of movement as set via parameter P1-01 Negative value: Negative direction of movement as set via parameter P1-01 See parameter P9-20 to select one direction of movement or both directions of movement for Comfort Tuning.	PUU -2147483647 0 2147483647 Decimal	s32 RW -	Modbus $A34_h$ EtherCAT $491A_h$
P9-27 PTNEG	Autotuning - Movement Range in Direction 2 This parameter specifies the movement range for autotuning in direction of movement 2. The sign of the value determines the direction of movement: Positive value: Positive direction of movement as set via parameter P1-01 Negative value: Negative direction of movement as set via parameter P1-01 See parameter P9-20 for Comfort Tuning in a single or in both directions of movement. See parameter P9-20 to select one direction of movement or both directions of movement for Comfort Tuning.	PUU -2147483647 0 2147483647 Decimal	s32 RW -	Modbus $A36_h$ EtherCAT $491B_h$

Setting Smoothing

Comfort Tuning uses S-curve smoothing by default. The value for smoothing via the S-curve is optimized during Comfort Tunings.

The parameter P9-23 allows you to change from automatic smoothing to manual smoothing.

The following options are available for manual smoothing:

- No smoothing
- Smoothing via low-pass filter with a fixed value
- Smoothing via S-curve with a fixed value

Parameter name	Description	Unit Minimum value Factory setting Maximum value HMI Format	Data type R/W Persistent	Parameter address via fieldbus
P9-23 LTNSTIFF	Defines which values are used for the position command filters. Value 0: Automatic smoothing via S-curve optimization of the value Value 1: Manual smoothing	- 0 0 1 Decimal	u16 RW -	Modbus $A2E_h$ EtherCAT 4917_h
P8-34 MOVESMOOTHMODE	Smoothing Filter for Operating mode Profile Position Value 0: No smoothing Value 1: LPF smoothing Value 2: S-curve smoothing Setting can only be modified if power stage is disabled.	- 0 2 2 Decimal	u16 RW per.	Modbus 944_h EtherCAT 4822_h

The illustration below shows the movement during Comfort Tuning if smoothing via the low-pass filter is used:

Comfort Tuning with smoothing via low-pass filter

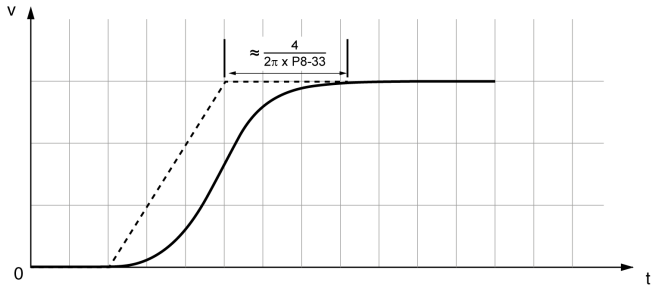

Parameter name	Description	Unit Minimum value Factory setting Maximum value HMI Format	Data type R/W Persistent	Parameter address via fieldbus
P8-33 MOVESMOOTHLPFHZ	Low Pass Filter Setting for Operating mode Profile Position	Hz 1 5000 500000 Decimal	u32 RW per.	Modbus 942_h EtherCAT 4821_h

The illustration below shows the movement during Comfort Tuning if smoothing via an S-curve is used:

Comfort Tuning with smoothing via S-curve

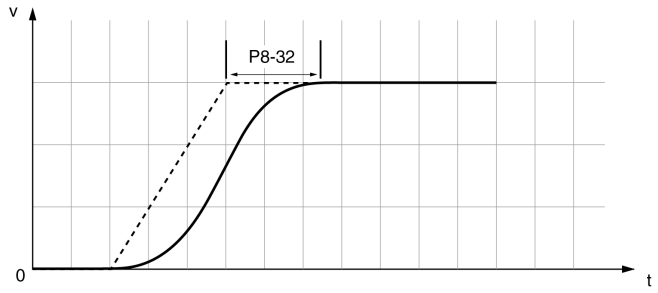

Parameter name	Description	Unit Minimum value Factory setting Maximum value HMI Format	Data type R/W Persistent	Parameter address via fieldbus
P8-32 MOVESMOOTHAVG	S-Curve Setting for Operating mode Profile Position Setting can only be modified if power stage is disabled. The maximum value is reduced to 12800 if P8-35 CONTROLMODE (high byte) is set to 5.	0.01 ms 25 400 25600 Decimal	u32 RW per.	Modbus 940_h EtherCAT 4820_h

Performing Comfort Tuning

Start Comfort Tuning by selecting the required method via the parameter P2-32.

Parameter name	Description	Unit Minimum value Factory setting Maximum value HMI Format	Data type R/W Persistent	Parameter address via fieldbus
P2-32 ATMODE	Autotuning This parameter is used to start autotuning with the selected autotuning method. Value 0: Stop Autotuning Value 1: Easy Tuning Value 2: Comfort Tuning [minimum settling time, vibration suppression] Value 3: Comfort Tuning [minimum overshoot, vibration suppression] Value 52: Comfort Tuning [minimum settling time, no vibration suppression] Value 53: Comfort Tuning [minimum overshoot, no vibration suppression]	- 0 0 56 Decimal	u16 RW -	Modbus 340_h EtherCAT 4220_h

If you want Comfort Tuning in both directions, set parameter P9-20 to 0. Then set the parameters P9-26 and P9-27 to the same values, but with different signs (for example, P9-26 = -20000 and P9-27 = +20000). The value determines the movement range in both directions.

If you want Comfort Tuning in a single direction, set parameter P9-20 to 2. Then set the parameters P9-26 and P9-27 to the same values. The sign of the value determines the direction for Comfort Tuning. For example, if you set P9-26 = -20000 and P9-27 = -20000, Comfort Tuning is performed in negative direction of movement with a movement range of 20000 PUU.

NOTE: If you do not enter consistent values for parameters P9-26 and P9-27, the autotuning is unsuccessful. Parameter P9-30 contains the information on the unsuccessful autotuning attempt.

After you have started the required Comfort Tuning method via P2-32, the display of the HMI shows the progress as a percentage from tn000 to tn100.

Press the **M** button of the HMI to cancel autotuning.

If autotuning completes successfully, the display of the HMI shows the message don?.

Press the OK key of the HMI to save the control loop parameters. The display of the HMI briefly shows the message ????d.

Press the M key of the HMI to discard the autotuning results.

If autotuning does not complete successfully, the display of the HMI shows the message E??0?. The cause can be read with the parameter P9-30.

The parameter P9-37 provides additional information on the last event that occurred during autotuning.

Manual Tuning

Manual tuning is performed in the operating mode Internal Profile. Manual tuning allows you to perform test movements and optimize the control loop settings using the Scope function.

NOTE: Manual tuning should only be attempted by trained persons who are familiar with and understand the contents of this manual and all other pertinent product documentation. These persons must have sufficient technical training, knowledge, and experience and be able to foresee and detect potential hazards and issues that may be caused by manual tuning, by changing the settings and by the mechanical, electrical, and electronic equipment of the entire system in which the product is used. No responsibility is assumed by Schneider Electric for any consequences arising out of the use of manual tuning.

In addition to the low-pass filter, electronic gear filter function can be used in the following cases:
- Pulse and direction command has a low resolution
- Low rigidity of the coupling between motor and load
- Movement is too short
- Motor is noisy after tuning
- Current is unstable during tuning
- Motor temperature is unusually high

Procedure for Manual Tuning

The control loop parameters are tuned in the following sequence:

Step	Item	Parameters
1	Derivative gain *(see page 205)*	P8-00 (LTND)
2	Low-pass filter *(see page 207)*	P8-14 (NLFILTDAMPING) P8-15 (NLFILTT1)
3	Retuning of the derivative gain *(see page 209)*	P8-00 (LTND)
4	Proportional gain *(see page 210)*	P8-03 (LTNP)
5	Derivative-integral gain *(see page 212)*	P8-02 (LTNIV)
6	Integral gain *(see page 214)*	P8-01 (LTNI)
7	Compensation of the flexibility of the mechanical system *(see page 215)*	P8-05 (NLAFFLPFHZ) P8-20 (NLPEAFF)

Depending on the requirements concerning the control performance, steps 2 and 3 can be omitted. Perform a movement in both directions after each of the steps below to check the recorded parameter values on the Scope tab of the commissioning software LXM28 DTM Library.

Step 1: Setting the Derivative Gain

The objective of tuning the derivative gain is to achieve a current ripple that is as low as possible. The optimum value primarily depends on the load.

Criteria for a well-tuned derivative gain include:
- For loads less than twice the rotor inertia: 5 % of the nominal current may be acceptable
- For greater loads: 10 % of the nominal current may be acceptable

The derivative gain is set via parameter P8-00 (LTND).

Procedure:
- Set the value of parameter P8-03 (LTNP) to 150 (corresponds to 15 Hz).
- Set the value of parameter P8-01 (LTNI) to 0.
- Set the value of parameter P8-02 (LTNIV) to 0.
- Progressively increase the value of parameter P8-00 (LTND) until the oscilloscope shows oscillation of the reference current, P11-11 (TCMD).

Example P8-00 (LTND) set to 1340 (134 Hz)

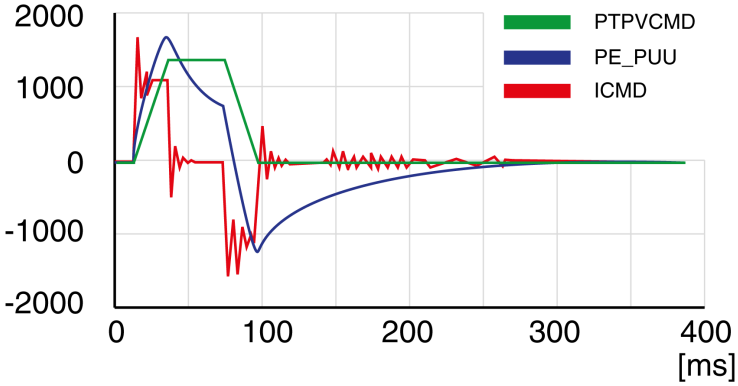

Example P8-00 (LTND) set too high at 2000 (200 Hz)

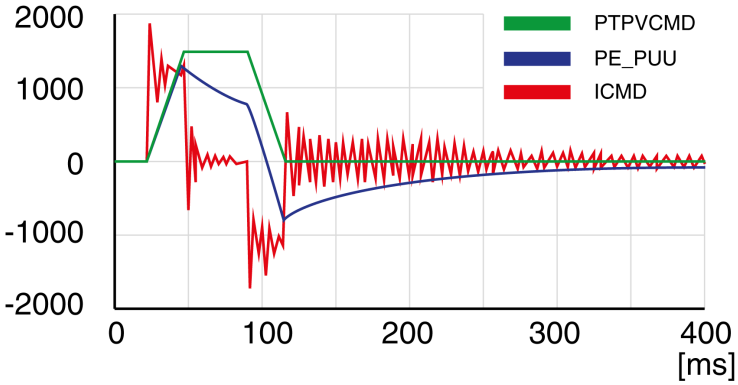

Example P8-00 (LTND) OK at 1500 (150 Hz)

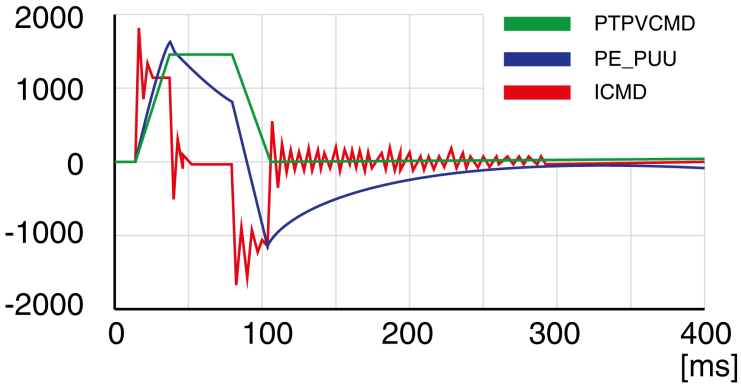

Example P8-00 (LTND) set too low at 100 (10 Hz)

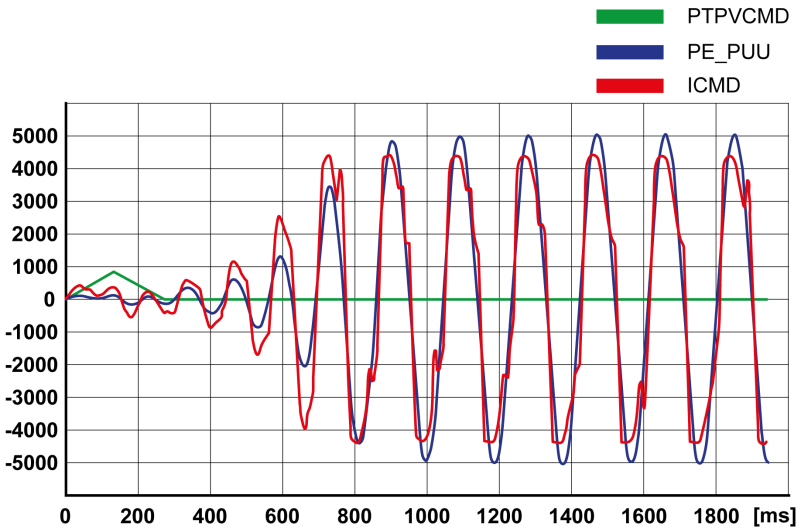

NOTE: The process of tuning requires trials of successive approximations. Values that are too high or too low relative to the other relevant values might cause instability. If it is necessary to have a low or high value of the parameter in the preceding example, you may need to adjust the values of the other relevant parameters to compensate and achieve a stable system.

Step 2: Setting the Low-Pass Filter

Setting the low-pass filter is an optional step in manual tuning of the control loop parameters. The low-pass filter parameters are optimized after you have tuned the derivative gain. The objective of tuning the low-pass filter parameters is to suppress high-frequency resonance and reduce the response time of the control loops to a minimum.

The low-pass filter is set via parameters P8-14 (NLFILTDAMPING) and P8-15 (NLFILTT1).

The parameter P8-14 (NLFILTDAMPING) maintains the bandwidth of the low-pass filter up to the cutoff frequency. The parameter value is expressed as a percentage. The parameter P8-15 (NLFILTT1) sets the inverse frequency of the cutoff frequency. The parameter P8-14 (NLFILTDAMPING) can also be used independently to allow for a certain degree of compensation of system-related bandwidth limits.

Criteria for a well-tuned low-pass filter include:

- The value of parameter P8-14 (NLFILTDAMPING) is as high as possible.
- The value of parameter P8-15 (NLFILTT1) is as low as possible.

When P8-35 (CONTROLMODE) (high byte) is set to 5, the following table presents the values for 10 % overshoot. Set the filter parameter values P8-14 (NLFILTDAMPING) and P8-15 (NLFILTT1) accordingly:

Frequency (Hz)	P8-14 (NLFILTDAMPING) (%)	P8-15 (NLFILTT1) (ms)
100	98.27	122.86
200	29.3	96.5
300	14.3	95
400	7.9	93.32
500	5.05	91.677
600	3.5	90.03
700	2.566	88.4
800	2	86.934
900	1.6056	85.457
1000	1.31	83.98
1100	1.09	82.45
1200	0.928694	81.1
1300	0.815	79.9
1400	0.7	78.4
1500	0.62	77

Frequency (Hz)	P8-14 (NLFILTDAMPING) (%)	P8-15 (NLFILTT1) (ms)
1600	0.555	75.97
1700	0.496	74.6
1800	0.439	73
1900	0.406	72.19
2000	0.365	70.5

Electronic gear filter example 1:

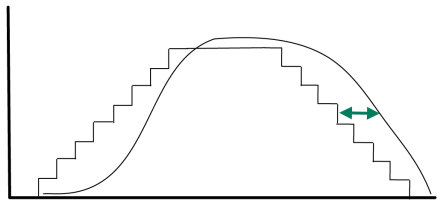

Increasing P8-27 (GEARFILTT1) smooths the input command, but adds a delay.

Electronic gear filter example 2:

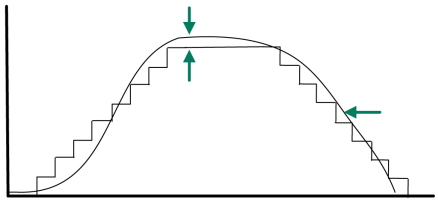

Increasing P8-28 (GEARFILTT2) and P8-29 (GEARFILTVELFF) compensate the delay, but adds overshoots.

If P8-29 (GEARFILTVELFF) has the same value as P8-28 (GEARFILTT2), there is no delay.

Usual values:
- P8-27 (GEARFILTT1) is usually around 2 times the input step width
- P8-28 (GEARFILTT2) is usually 2 times P8-27 (GEARFILTT1)

NOTE: When a system has multiple axes, gear filter values must be the same for all axes.

Procedure:
- Progressively increase the value of parameter P8-14 (NLFILTDAMPING) until the oscilloscope shows noise and/or oscillation of the reference current, P11-11 (TCMD).
- Progressively decrease the value of parameter P8-15 (NLFILTT1) until the oscilloscope shows noise and/or oscillation of the reference current P11-11 (TCMD).
- Increase the value of parameter P8-15 (NLFILTT1) by 20 %, however, by at least 0.05 ms.

Example P8-14 (NLFILTDAMPING) OK (75 %)

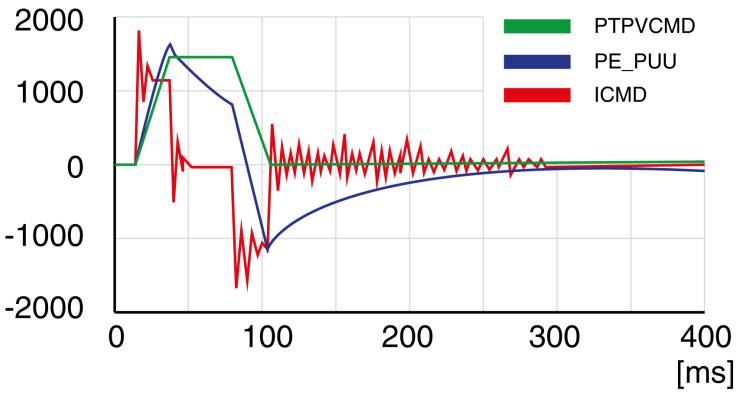

Example P8-15 (NLFILTT1) too low (0.5 ms)

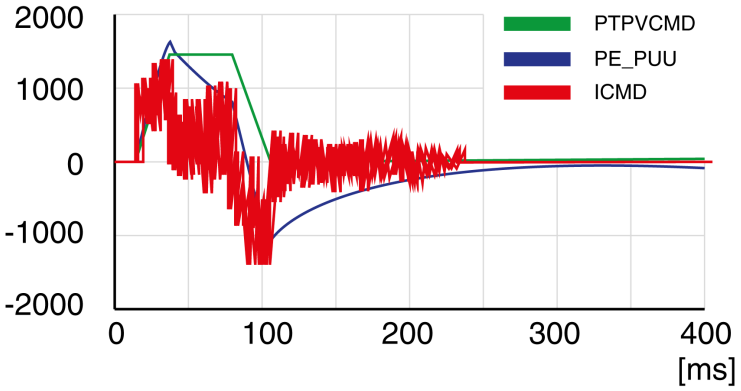

Example P8-15 (NLFILTT1) OK (1.2 ms)

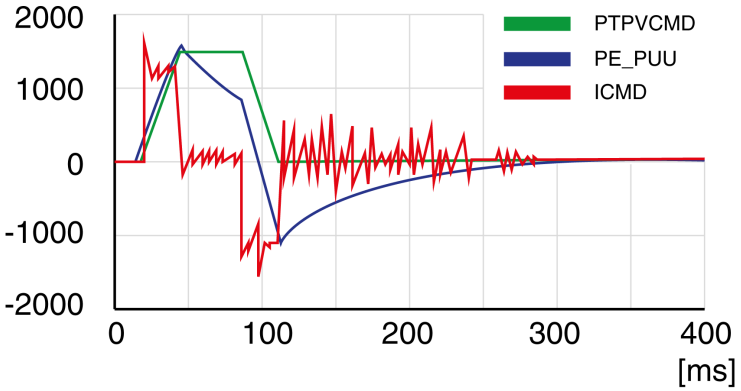

Step 3: Re-Tuning of the Derivative Gain

If you have modified the low-pass filter values in parameters P8-14 (NLFILTDAMPING) and P8-15 (NLFILTT1), the derivative gain can be set to a greater value via parameter P8-00 (LTND). Follow the procedure described in step 1.

The objective of tuning the proportional gain is to get a constant and low position deviation in the acceleration phase, the constant velocity phase, and the deceleration phase and to have no oscillations during the transitions between these phases. In the oscilloscope, this is indicated by a shape that is as square and as flat as possible.

Criteria for a well-tuned proportional gain include:

- No or minimum overshoot of position deviation
- No or minimum current ripple
- No or minimum oscillations at standstill

Step 4: Setting the Proportional Gain

The proportional gain is set via parameter `P8-03` (LTNP).

Procedure:

- Progressively increase the value of parameter `P8-03` (LTNP) to find the optimum value. The figures below show examples of the plot as the value approaches the optimum value.

Example `P8-03` (LTNP) starting value (13 Hz)

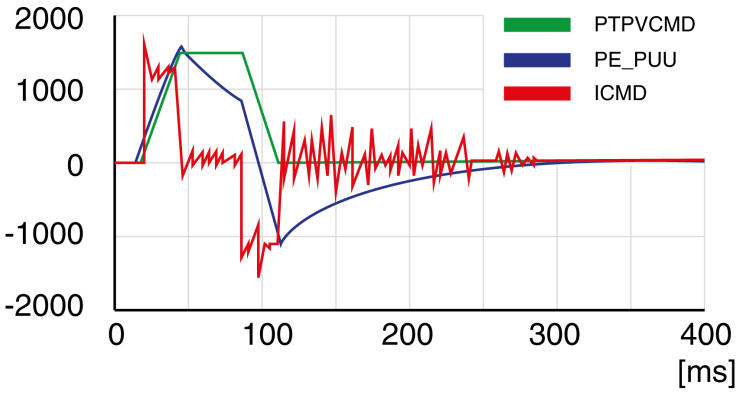

Example `P8-03` (LTNP) position deviation decreased (25 Hz)

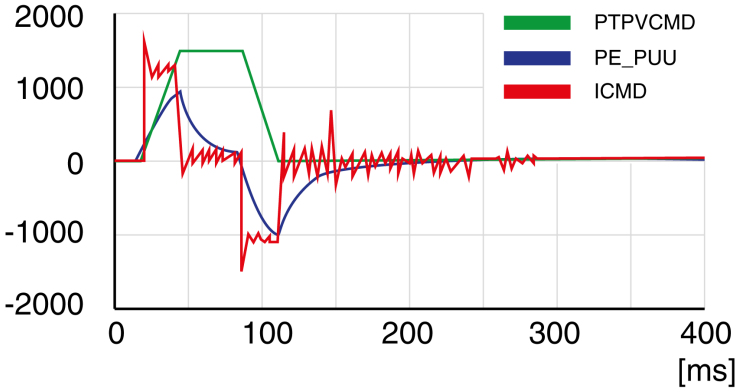

Example `P8-03` (LTNP) position deviation further decreased (35 Hz)

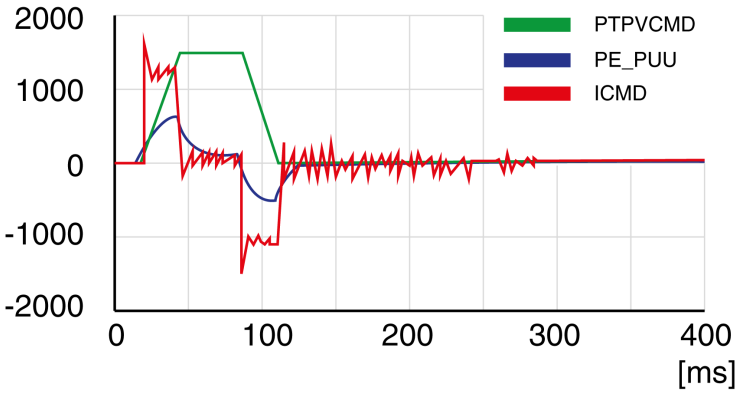

Example P8-03 (LTNP) position deviation further decreased (45 Hz)

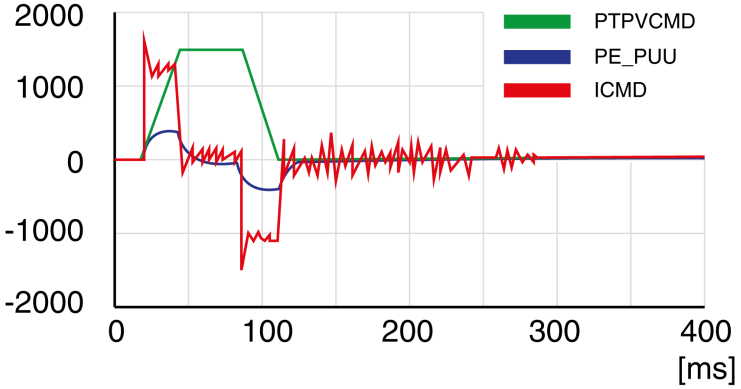

Example P8-03 (LTNP) value too high - oscillation at standstill (65 Hz)

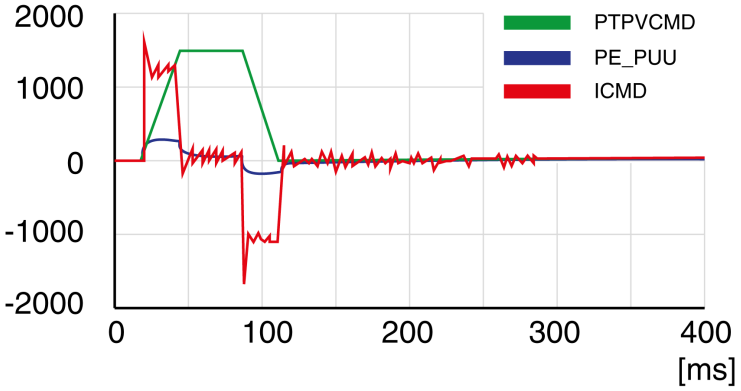

Example P8-03 (LTNP) value too high - oscillation at standstill (75 Hz)

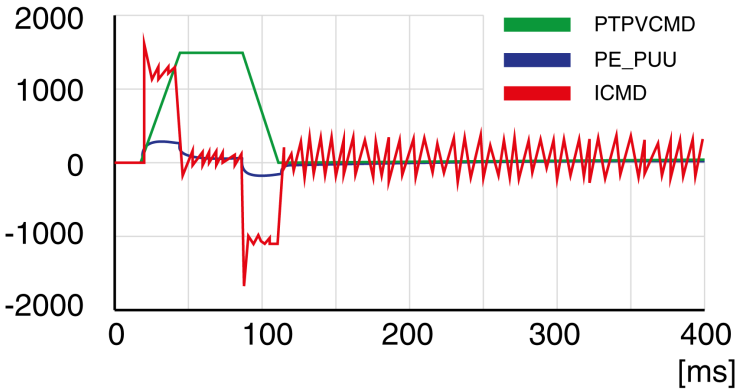

Example P8-03 (LTNP) value too high - oscillation at standstill, overshoot of position deviation (100 Hz)

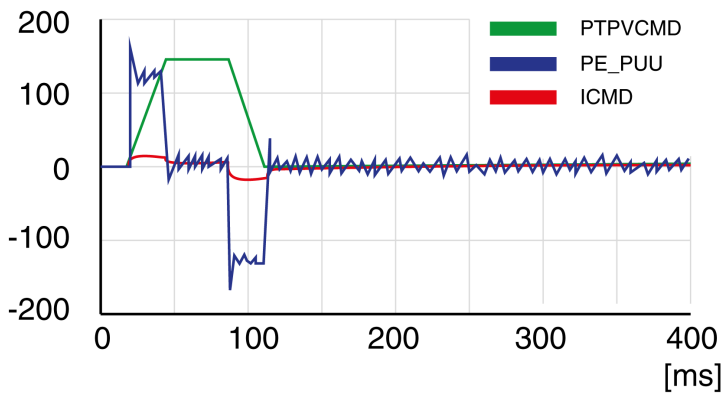

Example P8-03 (LTNP) OK (65 Hz)

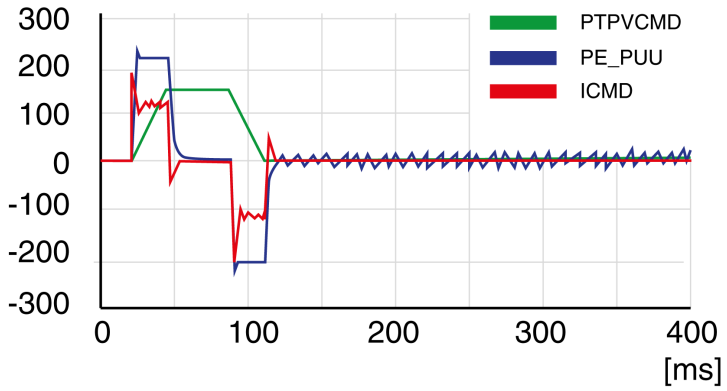

Step 5: Setting the Derivative-Integral Gain

The objective of tuning the derivative-integral gain is to reduce the position deviation. As a general rule, the value for the derivative-integral gain (P8-02LTNIV) is within the following range:

P8-03 (LTNP) / 2 < P8-02 (LTNIV) < 2 x P8-03 (LTNP)

Progressively increasing the value of the derivative-integral gain progressively decreases the position deviation during the acceleration phase, the constant velocity phase, and the deceleration phase.

Criteria for a well-tuned derivative-integral gain include:

- Position deviation decreases rapidly after each transition of the movement phases (jerk)
- No or minimum overshoot of position deviation
- No or minimum oscillations during transitions between the movement phases
- Oscillations at standstill as low as possible (+/- 1 encoder increment)

The derivative-integral gain is set via parameter P8-02 (LTNIV).

Procedure:

- Progressively increase the value of parameter P8-02 (LTNIV) to find the optimum value. The figures below show examples of the plot as the value approaches the optimum value.

Example P8-02 (LTNIV) starting value (30 Hz)

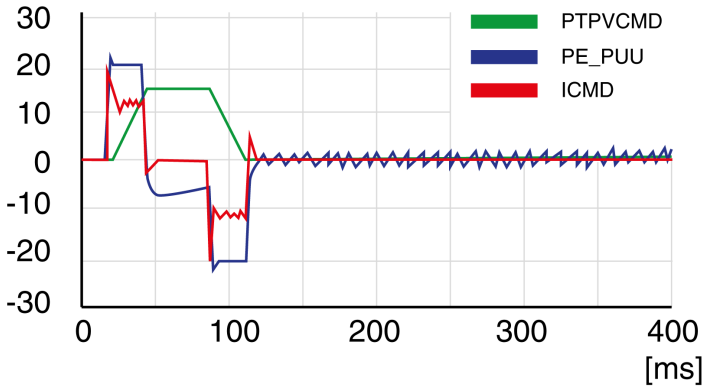

Example P8-02 (LTNIV) position deviation decreased (60 Hz)

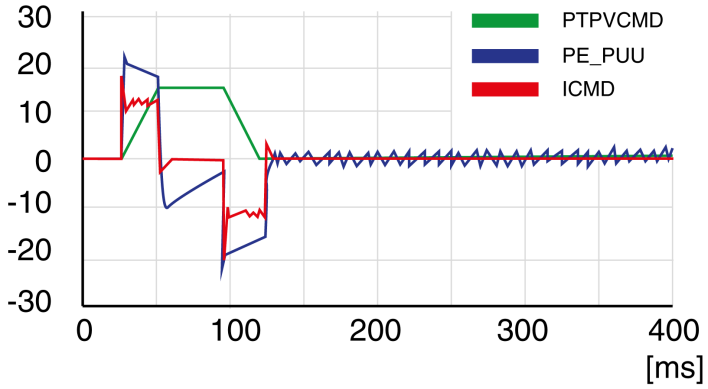

Example P8-02 (LTNIV) position deviation decreases rapidly when target velocity is reached (90 Hz)

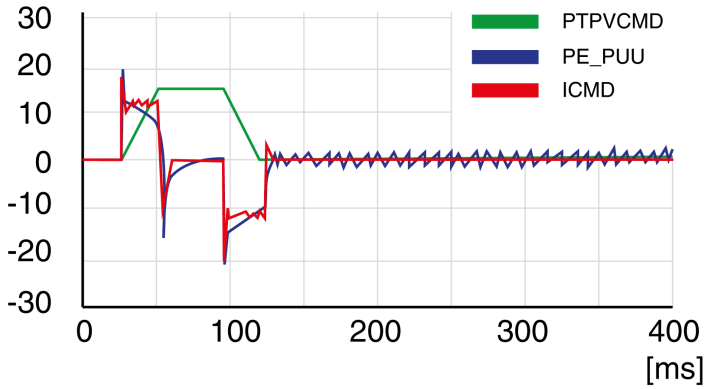

Example P8-02 (LTNIV) value too high - oscillation at standstill, overshoot of position deviation (120 Hz)

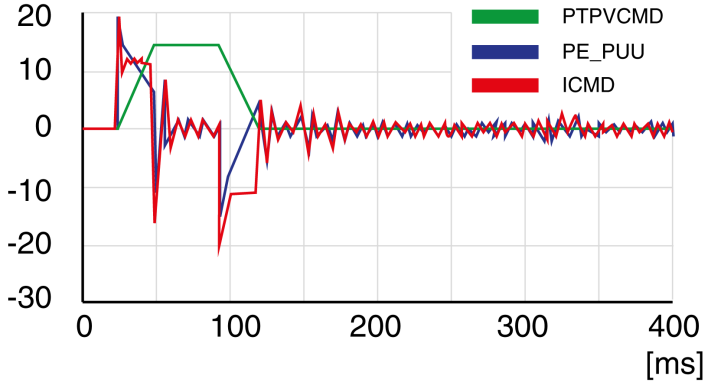

Example P8-02 (LTNIV) OK (90 Hz)

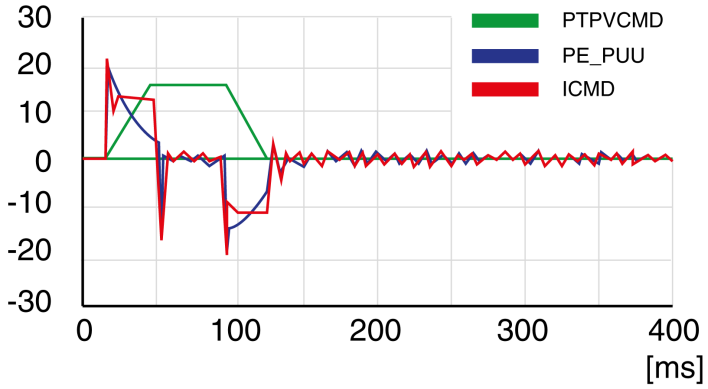

Step 6: Setting the Integral Gain

The objective of tuning the integral gain is to reduce the position deviation during movements and at standstill.

Criteria for a well-tuned integral gain include:

- Position deviation further reduced
- No or minimum overshoot of position deviation at the end of the deceleration phase
- Oscillations at standstill as low as possible (+/- 1 encoder increment)

The integral gain is set via parameter P8-01 (LTNI).

Procedure:

- Progressively increase the value of parameter P8-01 (LTNI) until the oscilloscope shows overshoot or oscillations. The figures below show examples of the plot as the value approaches the optimum value.

Example P8-01 (LTNI) value too high - oscillation at standstill, overshoot of position deviation (50 Hz)

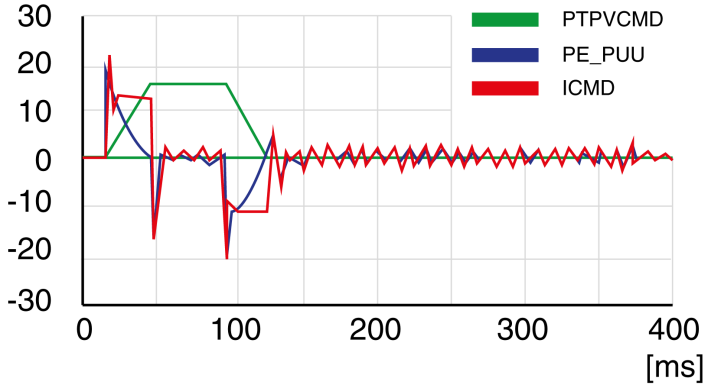

Example P8-01 (LTNI) OK (25 Hz)

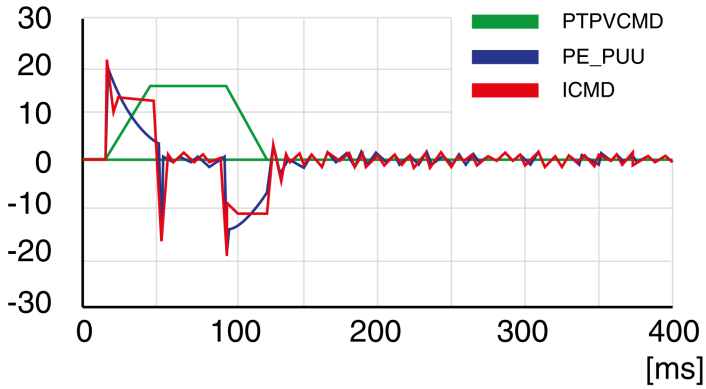

Step 7: Compensation of the Flexibility of the Mechanical System

The parameters for compensation of the system flexibility reduce the vibrations caused by abrupt changes in the acceleration (jerk). The parameters can also be used to further minimize overshoot or settling time.

The value of parameter P8-20 (NLPEAFF) reflects the oscillation frequency of the mechanical system, i.e. the coupling between the motor and the load. The coupling can be very rigid (for example, a direct drive or a low-backlash coupling) and less rigid (for example, a belt drive or an elastic coupling). Systems with a high rigidity require a high value. Systems with high load inertia and less rigid couplings require lower values. The less rigid the coupling, the lower this frequency. Depending on the application, the typical value range is 400 … 30 Hz.

The parameter P8-05 (NLAFFLPFHZ) sets a low-pass filter for the acceleration profile. If the target value has a relatively low resolution, the calculated acceleration may be subject to noise. The low-pass filter set via this parameter can be used to smooth the acceleration profile. The parameter can be used if the flexibility compensation set via parameter P8-20 (NLPEAFF) results in noise.

The compensation of the flexibility of the mechanical system is set via parameters P8-05 (NLAFFLPFHZ) and P8-20 (NLPEAFF).

Procedure:

- Set the value of parameter P8-05 (NLAFFLPFHZ) to a value three times as high as that of parameter P8-20 (NLPEAFF). With this value, the bandwidth of this low-pass filter is sufficiently higher than the response time of the system.
- Progressively decrease the value of parameter P8-20 (NLPEAFF) to find the optimum value. The optimum value depends on your optimization criterion: either short settling time or low position deviation. Start with a high frequency of 400 Hz. Decrease the value and compare the amplitudes for the position deviation and the settling time. Select the most suitable value according to your optimization criterion. The figures below show examples of the plot as the value approaches the optimum value.

Example P8-20 (NLPEAFF) without compensation of the flexibility (5000 Hz)

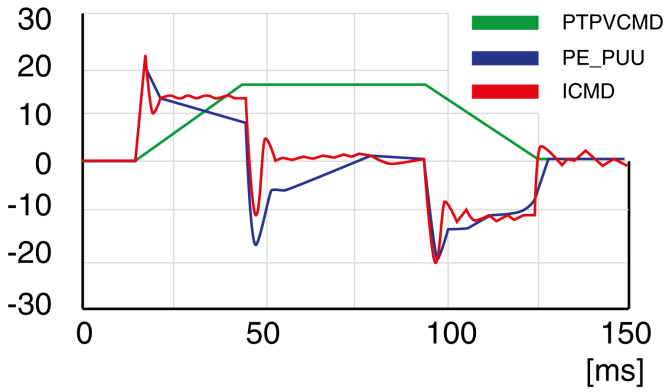

Example P8-20 (NLPEAFF) maximum position deviation decreased (300 Hz)

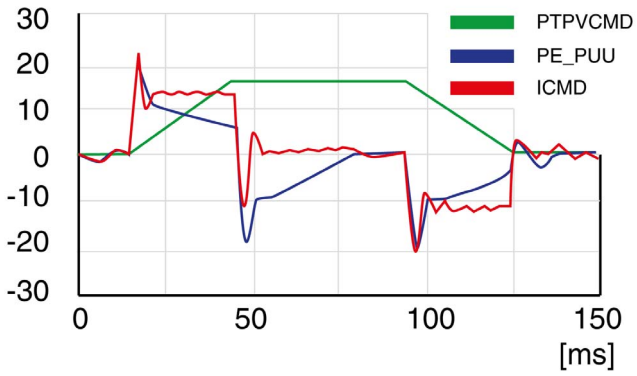

Example P8-20 (NLPEAFF) maximum position deviation further decreased (220 Hz)

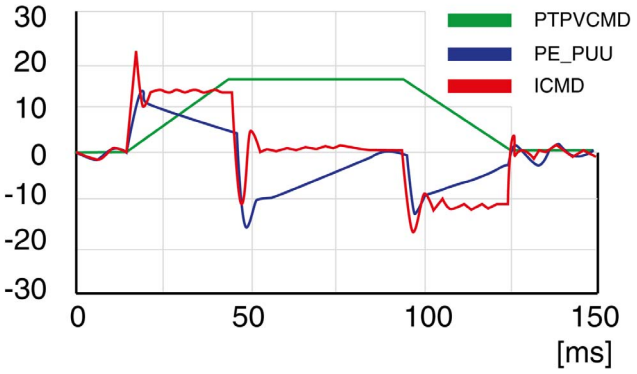

Example P8-20 (NLPEAFF) minimum position deviation, short settling time, oscillation at standstill (120 Hz)

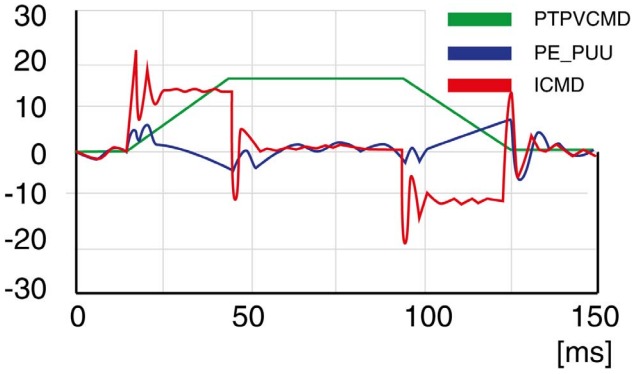

Example P8-20 (NLPEAFF) negative position deviation during acceleration phase (100 Hz)

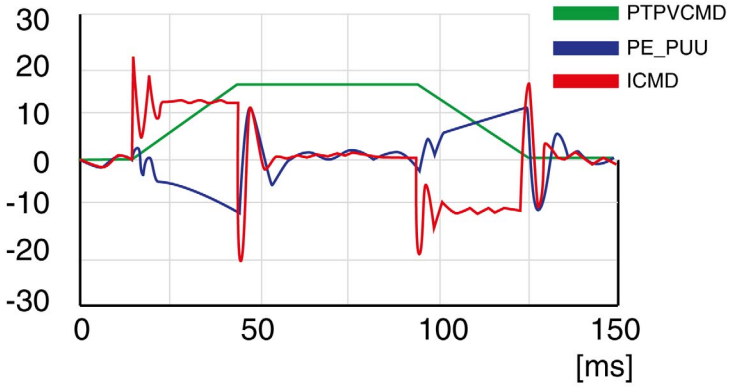

Part VI
Parameters

Chapter 16
Servo Drive Parameters

What Is in This Chapter?

This chapter contains the following topics:

Topic	Page
Representation of the Parameters	220
P0 - Status Parameters	221
P1 - Basic Parameters	226
P2 - Extended Parameters	235
P3 - Communication Parameters	241
P4 - Diagnostics Parameters	243
P5 - Motion Settings	246
P8 - Control Loops	250
P9 - DTM Data	258

Representation of the Parameters

This chapter provides an overview of the parameters which can be used for operating the product.

Unsuitable settings or unsuitable data may trigger unintended movements, trigger signals, damage parts and disable monitoring functions. Some parameters and other operational data do not become active until after a restart.

⚠ WARNING

UNINTENDED EQUIPMENT OPERATION

- Only start the system if there are no persons or obstructions in the zone of operation.
- Do not operate the drive system with undetermined parameter values.
- Never modify a parameter value unless you fully understand the parameter and all effects of the modification.
- Restart the drive and verify the saved operational data and/or parameter values after modification.
- Carefully run tests for all operating states and potential error situations when commissioning, upgrading or otherwise modifying the operation of the drive.
- Verify the functions after replacing the product and also after making modifications to the parameter values and/or other operational data.

Failure to follow these instructions can result in death, serious injury, or equipment damage.

NOTE: Possible values of a parameter that are not described are considered as reserved and must not be used.

Parameter Name

The parameter name uniquely identifies a parameter.

Unit

The unit of the value.

P0 - Status Parameters

P0 - Status Parameters

Parameter name	Description	Unit Minimum value Factory setting Maximum value HMI Format	Data type R/W Persistent	Parameter address via fieldbus
P0-00 VER	Firmware Version	- 0_h 0_h $FFFF_h$ Hexadecimal	u16 RO -	Modbus 100_h EtherCAT 4000_h
P0-01 ALE	Error code of detected error This parameter contains the error number of the most recently detected error. For a list of the detected error codes, refer to Error Codes *(see page 314)*.	- 0_h 0_h $FFFF_h$ Hexadecimal	u16 RW -	Modbus 102_h EtherCAT 4001_h
P0-02 STS	Drive Status Displayed by HMI This parameter selects the type of status information to be displayed on the HMI. Example: If the setting is 7, the HMI displays the speed of rotation of the motor. For further information, refer to chapter Status Information via the HMI *(see page 188)*.	- 0 0 123 Decimal	u16 RW per.	Modbus 104_h EtherCAT 4002_h
P0-04 FPGAVER	FPGA Version	- 0_h $-_h$ $0000FFFF_h$ Hexadecimal	u16 RO -	Modbus 108_h EtherCAT 4004_h
P0-08 TSON	Operating Hour Meter in Seconds	s 0 - 4294967295 Decimal	u32 RO -	Modbus 110_h EtherCAT 4008_h
P0-09 CM1	Status Value 1 This parameter is used to provide the value of one of the status indications in P0-02. The value of this parameter is determined via P0-17. Examples: If the status of the drive is read via the HMI and if P0-02 is set to 23, VAR-1 is displayed for approximately two seconds by the HMI, followed by the value of this parameter. If the setting of P0-17 is 3, reading this parameter displays the actual position in pulses. For reading the status via Modbus, read two 16-bit data stored in the addresses of 0012H and 0013H to generate 32-bit data. (0013H : 0012H) = (high byte : low byte)	- -2147483647 - 2147483647 Decimal	s32 RO -	Modbus 112_h EtherCAT 4009_h
P0-10 CM2	Status Value 2 This parameter is used to provide the value of one of the status indications in P0-02. The value of this parameter is determined via P0-18. See P0-09 for details.	- -2147483647 - 2147483647 Decimal	s32 RO -	Modbus 114_h EtherCAT $400A_h$

Parameter name	Description	Unit Minimum value Factory setting Maximum value HMI Format	Data type R/W Persistent	Parameter address via fieldbus
P0-11 CM3	Status Value 3 This parameter is used to provide the value of one of the status indications in P0-02. The value of this parameter is determined via P0-19. See P0-09 for details.	- -2147483647 - 2147483647 Decimal	s32 RO -	Modbus 116_h EtherCAT $400B_h$
P0-12 CM4	Status Value 4 This parameter is used to provide the value of one of the status indications in P0-02. The value of this parameter is determined via P0-20. See P0-09 for details.	- -2147483647 - 2147483647 Decimal	s32 RO -	Modbus 118_h EtherCAT $400C_h$
P0-13 CM5	Status Value 5 This parameter is used to provide the value of one of the status indications in P0-02. The value of this parameter is determined via P0-21. See P0-09 for details.	- -2147483647 - 2147483647 Decimal	s32 RO -	Modbus $11A_h$ EtherCAT $400D_h$
P0-17 CMA1	Indicate status value 1 This parameter is used to select a drive status provided in P0-02. The selected status is indicated via P0-09. Example: If the setting of P0-17 is 7, reading P0-09 returns the speed of rotation of the motor in rpm.	- 0 0 123 Decimal	u16 RW per.	Modbus 122_h EtherCAT 4011_h
P0-18 CMA2	Indicate status value 2 This parameter is used to select a drive status provided in P0-02. The selected status is indicated via P0-10. See P0-17 for details.	- 0 0 123 Decimal	u16 RW per.	Modbus 124_h EtherCAT 4012_h
P0-19 CMA3	Indicate status value 3 This parameter is used to select a drive status provided in P0-02. The selected status is indicated via P0-11. See P0-17 for details.	- 0 0 123 Decimal	u16 RW per.	Modbus 126_h EtherCAT 4013_h
P0-20 CMA4	Indicate status value 4 This parameter is used to select a drive status provided in P0-02. The selected status is indicated via P0-12. See P0-17 for details.	- 0 0 123 Decimal	u16 RW per.	Modbus 128_h EtherCAT 4014_h
P0-21 CMA5	Indicate status value 5 This parameter is used to select a drive status provided in P0-02. The selected status is indicated via P0-13. See P0-17 for details.	- 0 0 123 Decimal	u16 RW per.	Modbus $12A_h$ EtherCAT 4015_h
P0-25 MAP1	Parameter Mapping 1 The parameters from P0-25 ... P0-32 are used to read and write the values of parameters with non-consecutive communication addresses. You can set P0-35 ... P0-42 as the required read and write mapping parameter numbers. When P0-25 ... P0-32 are read, the read or write values are equivalent to the values of the parameters specified via P0-35 ... P0-42, and vice versa. See P0-35 for details.	- 0_h 0_h $FFFFFFFF_h$ Hexadecimal	u32 RW -	Modbus 132_h EtherCAT 4019_h

Parameter name	Description	Unit Minimum value Factory setting Maximum value HMI Format	Data type R/W Persistent	Parameter address via fieldbus
P0-26 MAP2	Parameter Mapping 2 See P0-25 and P0-36 for details.	- 0_h 0_h $FFFFFFFF_h$ Hexadecimal	u32 RW -	Modbus 134_h EtherCAT $401A_h$
P0-27 MAP3	Parameter Mapping 3 See P0-25 and P0-37 for details.	- 0_h 0_h $FFFFFFFF_h$ Hexadecimal	u32 RW -	Modbus 136_h EtherCAT $401B_h$
P0-28 MAP4	Parameter Mapping 4 See P0-25 and P0-38 for details.	- 0_h 0_h $FFFFFFFF_h$ Hexadecimal	u32 RW -	Modbus 138_h EtherCAT $401C_h$
P0-29 MAP5	Parameter Mapping 5 See P0-25 and P0-39 for details.	- 0_h 0_h $FFFFFFFF_h$ Hexadecimal	u32 RW -	Modbus $13A_h$ EtherCAT $401D_h$
P0-30 MAP6	Parameter Mapping 6 See P0-25 and P0-40 for details.	- 0_h 0_h $FFFFFFFF_h$ Hexadecimal	u32 RW -	Modbus $13C_h$ EtherCAT $401E_h$
P0-31 MAP7	Parameter Mapping 7 See P0-25 and P0-41 for details.	- 0_h 0_h $FFFFFFFF_h$ Hexadecimal	u32 RW -	Modbus $13E_h$ EtherCAT $401F_h$
P0-32 MAP8	Parameter Mapping 8 See P0-25 and P0-42 for details.	- 0_h 0_h $FFFFFFFF_h$ Hexadecimal	u32 RW -	Modbus 140_h EtherCAT 4020_h

Parameter name	Description	Unit Minimum value Factory setting Maximum value HMI Format	Data type R/W Persistent	Parameter address via fieldbus
P0-35 MAPA1	Block Data Read/Write P0-35…P0-42 1 The parameters P0-35 ... P0-42 specify the required read and write parameter numbers for P0-25 ... P0-32. They read and write the values of the parameters whose communication addresses are not consecutive. The read/write parameter can be a single 32-bit parameter or two 16-bit parameters. 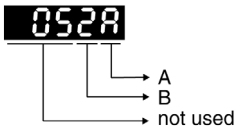 A: Parameter group code in hexadecimal format B: Parameter number in hexadecimal format Example: If you want to read and write the value of P1-44 (32-bit parameter) via P0-25, set P0-35 to $012C012C_h$. If you want to read and write the values of P2-02 (16-bit parameter) and P2-04 (16-bit parameter) via P0-25, set P0-35 to 02040202_h.	- 0_h 0_h $FFFFFFFF_h$ Hexadecimal	u32 RW per.	Modbus 146_h EtherCAT 4023_h
P0-36 MAPA2	Block Data Read/Write P0-35…P0-42 2 See P0-35 for details.	- 0_h 0_h $FFFFFFFF_h$ Hexadecimal	u32 RW per.	Modbus 148_h EtherCAT 4024_h
P0-37 MAPA3	Block Data Read/Write P0-35…P0-42 3 See P0-35 for details.	- 0_h 0_h $FFFFFFFF_h$ Hexadecimal	u32 RW per.	Modbus $14A_h$ EtherCAT 4025_h
P0-38 MAPA4	Block Data Read/Write P0-35…P0-42 4 See P0-35 for details.	- 0_h 0_h $FFFFFFFF_h$ Hexadecimal	u32 RW per.	Modbus $14C_h$ EtherCAT 4026_h
P0-39 MAPA5	Block Data Read/Write P0-35…P0-42 5 See P0-35 for details.	- 0_h 0_h $FFFFFFFF_h$ Hexadecimal	u32 RW per.	Modbus $14E_h$ EtherCAT 4027_h
P0-40 MAPA6	Block Data Read/Write P0-35…P0-42 6 See P0-35 for details.	- 0_h 0_h $FFFFFFFF_h$ Hexadecimal	u32 RW per.	Modbus 150_h EtherCAT 4028_h
P0-41 MAPA7	Block Data Read/Write P0-35…P0-42 7 See P0-35 for details.	- 0_h 0_h $FFFFFFFF_h$ Hexadecimal	u32 RW per.	Modbus 152_h EtherCAT 4029_h

Parameter name	Description	Unit Minimum value Factory setting Maximum value HMI Format	Data type R/W Persistent	Parameter address via fieldbus
P0-42 MAPA8	Block Data Read/Write P0-35…P0-42 8 See P0-35 for details.	- 0_h 0_h $FFFFFFFF_h$ Hexadecimal	u32 RW per.	Modbus 154_h EtherCAT $402A_h$
P0-46 SVSTS	State of Signal Output Functions This parameter is used to indicate the state of the signal output function of the drive in hexadecimal format. If the function is assigned to a digital output, it would represent the state of the output given no forcing on the output. Bit 0: SRDY (Servo ready) Bit 1: SON (Servo On) Bit 2: ZSPD (Zero speed) Bit 3: TSPD (Speed reached) Bit 4: TPOS (Movement completed) Bit 5: TQL (Torque Limit Reached) Bit 6: ERR (Error Detected) Bit 7: BRKR (Holding brake control) Bit 8: HOMED_OK (Homing completed) Bit 9: OLW (Motor Overload Alert) Bit 10: WARN (indicates that one of the following conditions has been detected: Hardware limit switch triggered, undervoltage, Nodeguard alert, Operational Stop (OPST)) Bits 11 ... 15: Reserved The parameter can also be read via the fieldbus.	- 0_h 0_h $FFFF_h$ Hexadecimal	u16 RO -	Modbus $15C_h$ EtherCAT $402E_h$
P0-47 LAST_WRN	Number of Last Alert This parameter contains the number of the last detected alert. After a Fault Reset, the number is cleared.	- 0_h 0_h $FFFF_h$ Hexadecimal	u16 RO -	Modbus $15E_h$ EtherCAT $402F_h$

P1 - Basic Parameters

P1 - Basic Parameters

Parameter name	Description	Unit Minimum value Factory setting Maximum value HMI Format	Data type R/W Persistent	Parameter address via fieldbus
P1-01 CTL	Operating Mode and Direction of Rotation 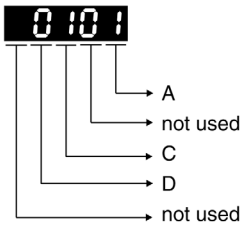 A: Operating mode Refer to chapter Setting the Operating Mode *(see page 280)*. C: Direction of movement Refer to chapter Verifying the Direction of Movement *(see page 193)*. D: Signal input functions and signal output functions after operating mode switching Value 0: The assignments of the signal input functions and the signal output functions (P2-10 ... P2-21) remain identical for the new operating mode. Value 1: The assignments of the signal input functions and the signal output functions (P2-10 ... P2-21)) are set to the default presets of the new operating mode. Refer to chapters Default Presets of the Signal Inputs *(see page 268)* and Default Presets of the Signal Outputs *(see page 270)*. Modified settings become active the next time the product is powered on.	- 20_h 99_h 1199_h Hexadecimal	u16 RW per.	Modbus 202_h EtherCAT 4101_h
P1-02 PSTL	Velocity and Torque Limitations Activation/Deactivation This parameter activates/deactivates velocity limitation and torque limitation. 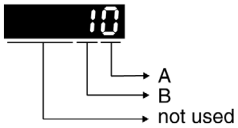 A: Velocity limitation 0: Deactivate 1: Activate (in operating mode EtherCAT T (refer to P1-82)) B: Torque limitation 0: Deactivate 1: Activate (operating modes EtherCAT V (refer to P1-85))	- 0_h 0_h 11_h Hexadecimal	u16 RW per.	Modbus 204_h EtherCAT 4102_h

Parameter name	Description	Unit Minimum value Factory setting Maximum value HMI Format	Data type R/W Persistent	Parameter address via fieldbus
P1-03 AOUT	Polarity of Pulse Outputs 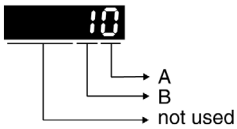 This parameter is used to specify the polarity of pulse outputs. A: Reserved B: Polarity of pulse outputs 0: Not inverted 1: Inverted	- 0_h 0_h 10_h Hexadecimal	u16 RW per.	Modbus 206_h EtherCAT 4103_h
P1-06 DCOMopmod	EtherCAT Opmode	% -32768 0 32767 Decimal	s16 RO -	Modbus $20C_h$ EtherCAT 4106_h
P1-07 ReactLimSw	Limit Switch Fault Reaction Fault Reaction selection after a limit switch is at active state while the power stage is disabled (Servo On) 1: The drive does not trigger an error (for Beckhoff TwinWCAT V3 architecture) 0: The drive triggers an error	- 0 1 1 Decimal	u16 RW per.	Modbus $20E_h$ EtherCAT 4107_h
P1-09 SP1	Velocity Limitation 1 This parameter specifies the first velocity limitation.	0.1rpm -60000 10000 60000 Decimal	s32 RW per.	Modbus 212_h EtherCAT 4109_h
P1-10 SP2	Velocity Limitation 2 This parameter specifies the second velocity limitation.	0.1rpm -60000 20000 60000 Decimal	s32 RW per.	Modbus 214_h EtherCAT $410A_h$
P1-11 SP3	Velocity Limitation 3 This parameter specifies the third velocity limitation.	0.1rpm -60000 30000 60000 Decimal	s32 RW per.	Modbus 216_h EtherCAT $410B_h$
P1-12 TQ1	Torque Limitation 1 This parameter specifies the first torque limitation in percent of nominal current. The signal output function TQL is activated if the torque reaches the torque limitations set via the parameters P1-12 ... P1-14.	% -300 100 300 Decimal	s16 RW per.	Modbus 218_h EtherCAT $410C_h$
P1-13 TQ2	Torque Limitation 2 This parameter specifies the second torque limitation in percent of nominal current. The signal output function TQL is activated if the torque reaches the torque limitations set via the parameters P1-12 ... P1-14.	% -300 100 300 Decimal	s16 RW per.	Modbus $21A_h$ EtherCAT $410D_h$

Parameter name	Description	Unit Minimum value Factory setting Maximum value HMI Format	Data type R/W Persistent	Parameter address via fieldbus
P1-14 TQ3	Torque Limitation 3 This parameter specifies the third torque limitation in percent of nominal current. The signal output function TQL is activated if the torque reaches the torque limitations set via the parameters P1-12 ... P1-14.	% -300 100 300 Decimal	s16 RW per.	Modbus $21C_h$ EtherCAT $410E_h$
P1-15 LINELOSSMODE	Mains Phase Monitoring - Response to Missing Mains Phase This parameter specifies the response of the drive if the mains phase monitoring function detects an error. Value 0: Detected error if power stage is enabled or disabled Value 1: Detected error if power stage is enabled, alert if power stage is disabled Value 2: Alert if power stage is enabled or disabled	- 0 0 2 Decimal	u16 RW per.	Modbus $21E_h$ EtherCAT $410F_h$
P1-16 LINELOSSRECOVER	Mains Phase Monitoring - Fault Reset This parameter specifies the type of Fault Reset after a detected mains phase error has been removed. Value 0: No automatic Fault Reset Value 1: Automatic Fault Reset	- 0 0 1 Decimal	u16 RW per.	Modbus 220_h EtherCAT 4110_h
P1-17 LINELOSSTYPE	Mains Phase Monitoring - Type This parameter specifies the type of mains phase monitoring Value 0: No mains phase monitoring Value 1: Mains phase monitoring single-phase connection Value 2: Mains phase monitoring three-phase connection	- 0 0 2 Decimal	u16 RW per.	Modbus 222_h EtherCAT 4111_h
P1-19 DISTIME	Active Disable - Delay Time Power Stage This parameter specifies the delay time between standstill of the motor and disabling the power stage.	ms 0 0 6500 Decimal	u16 RW per.	Modbus 226_h EtherCAT 4113_h
P1-20 ESTOPILIM	Current Limit During Quick Stop This parameter specifies the maximum current during a Quick Stop (expressed as factor of P1-78).	0.001 1 1000 1000 Decimal	s16 RW per.	Modbus 228_h EtherCAT 4114_h
P1-21 FOLD	Status of Foldback Current Drive This parameter indicates whether the foldback current limit is greater than or less than the maximum current of the drive (see P1-78). Value 0: Foldback current limit greater than P1-78 Value 1: Foldback current limit is less than P1-78	- 0 - 1 Decimal	u16 RO -	Modbus $22A_h$ EtherCAT 4115_h
P1-22 IFOLD	Foldback Current Limit - Drive Drive foldback current limit	0.01A 0 - 30000 Decimal	u32 RO -	Modbus $22C_h$ EtherCAT 4116_h

Parameter name	Description	Unit Minimum value Factory setting Maximum value HMI Format	Data type R/W Persistent	Parameter address via fieldbus
P1-23 IFOLDFTHRESH	Current Monitoring Drive - Detected Error Threshold Foldback Current This parameter specifies the threshold value used by the drive current monitoring function to detect a drive foldback current error.	0.01A 0 - 30000 Decimal	u32 RW per.	Modbus $22E_h$ EtherCAT 4117_h
P1-24 IFOLDWTHRESH	Current Monitoring Drive - Alert Threshold Foldback Current This parameter specifies the threshold value used by the drive current monitoring function to trigger a drive foldback current alert.	0.01A 0 - 30000 Decimal	u32 RW per.	Modbus 230_h EtherCAT 4118_h
P1-25	Reserved	–	–	–
P1-26 MIFOLD	Foldback Current Limit - Motor Motor foldback current limit	0.01A 0 - 30000 Decimal	u32 RO -	Modbus 234_h EtherCAT $411A_h$
P1-27 MIFOLDFTHRESH	Motor Current Monitoring - Detected Error Threshold Foldback Current This parameter specifies the threshold value used by the motor current monitoring function to detect a motor foldback current error.	0.01A 0 - 30000 Decimal	u32 RW per.	Modbus 236_h EtherCAT $411B_h$
P1-28 MIFOLDWTHRESH	Motor Current Monitoring - Alert Threshold Foldback Current This parameter specifies the threshold value used by the motor current monitoring function to trigger a motor foldback current alert.	0.01A 0 - 30000 Decimal	u32 RW per.	Modbus 238_h EtherCAT $411C_h$
P1-29 OVTHRESH	DC Bus Overvoltage Monitoring - Threshold This parameter specifies the threshold value used by the DC bus overvoltage monitoring function.	V - - - Decimal	u16 RO -	Modbus $23A_h$ EtherCAT $411D_h$
P1-30 COMMERRMAXCNT	Commutation Monitoring - Maximum Counter Value	ms 0 0 0 Decimal	u16 RW -	Modbus $23C_h$ EtherCAT $411E_h$

Parameter name	Description	Unit Minimum value Factory setting Maximum value HMI Format	Data type R/W Persistent	Parameter address via fieldbus
P1-32 LSTP	Stop Method This parameter specifies how the motor is stopped if the power stage is to be disabled (includes signal input function OPST) or if an error is detected. Value 0_h: Deceleration ramp Value 10_h: Coast to stop Value 20_h: Deceleration ramp to velocity P1-38, then coast to stop (actual velocity must be less than the value of P1-38 for 50 ms before coasting to stop starts) Depending on the event that triggered the stop, the following deceleration ramps are used: - Transmission error detected: P5-21 - Position overflow: P5-22 - Triggering of negative software limit switch: P5-23 - Triggering of positive software limit switch: P5-24 - Triggering of negative hardware limit switch: P5-25 - Triggering of positive hardware limit switch: P5-26 - Any other event: P1-68 The delay time between standstill of the motor and disabling the power stage is set via P1-19.	- 0_h 0_h 20_h Hexadecimal	u16 RW per.	Modbus 240_h EtherCAT 4120_h
P1-34 TACC	Acceleration Period The acceleration period is the time in milliseconds required to accelerate from motor standstill to 6000 rpm.	ms 6 30 65500 Decimal	u16 RW per.	Modbus 244_h EtherCAT 4122_h
P1-35 TDEC	Deceleration Period The deceleration period is the time in milliseconds required to decelerate from 6000 rpm to motor standstill.	ms 6 30 65500 Decimal	u16 RW per.	Modbus 246_h EtherCAT 4123_h
P1-37 LMJR	Ratio of Load Inertia to Motor Inertia This parameter specifies the ratio of load inertia to motor inertia (J_load / J_motor). J_load: Total moment of inertia of external mechanical load J_motor: Moment of inertia of motor	0.1 0 10 20000 Decimal	u32 RW per.	Modbus $24A_h$ EtherCAT 4125_h
P1-38 ZSPD	Signal Output Function ZSPD This parameter specifies the velocity for the signal output function ZSPD. The signal output function ZSPD indicates that the velocity of the motor is less than the velocity value set via this parameter.	0.1rpm 0 100 2000 Decimal	s32 RW per.	Modbus $24C_h$ EtherCAT 4126_h
P1-39 SSPD	Signal Output Function TSPD - Velocity This parameter specifies the velocity for the signal output function TSPD. The signal output function TSPD indicates that the velocity of the motor is greater than the velocity value set via this parameter.	rpm 0 3000 5000 Decimal	u32 RW per.	Modbus $24E_h$ EtherCAT 4127_h

Parameter name	Description	Unit Minimum value Factory setting Maximum value HMI Format	Data type R/W Persistent	Parameter address via fieldbus
P1-42 MBT1	ON Delay Time of Holding Brake This parameter specifies the time between enabling the power stage and starting a movement (opening time for the holding brake).	ms 0 0 1000 Decimal	u16 RW per.	Modbus 254_h EtherCAT $412A_h$
P1-44 GR1	Electronic Gear Ratio - Numerator 1 This parameter is used to set the numerator of the gear ratio. The denominator of the gear ratio is set via P1-45.	- 1 1 536870911 Decimal	u32 RW per.	Modbus 258_h EtherCAT $412C_h$
P1-45 GR2	Electronic Gear Ratio - Denominator This parameter is used to set the denominator of the gear ratio. The numerator of the gear ratio is set via P1-44. Setting can only be modified if power stage is disabled.	- 1 131072 2147483647 Decimal	u32 RW per.	Modbus $25A_h$ EtherCAT $412D_h$
P1-46 ENCOUTRES	Number of encoder simulation increments (AB signal) per revolution The calculation of the range of this parameter depends on the value of P1-55. Setting can only be modified if power stage is disabled.	LPR - 2048 - Decimal	s32 RW per.	Modbus $25C_h$ EtherCAT $412E_h$
P1-52 REGENRES	Braking Resistor - Resistance This parameter is used to set the resistance of the braking resistor. Value -1: No braking resistor	Ohm -1 - 32767 Decimal	s16 RW per.	Modbus 268_h EtherCAT 4134_h
P1-53 REGENPOW	Braking Resistor - Power This parameter is used to set the power of the braking resistor. Value -1: No braking resistor	W -1 - 32767 Decimal	s16 RW per.	Modbus $26A_h$ EtherCAT 4135_h
P1-54 PER	Signal Output Function TPOS - Trigger Value This parameter specifies the position deviation value used to activate the signal output function TPOS.	PUU 0 1311 1280000 Decimal	u32 RW per.	Modbus $26C_h$ EtherCAT 4136_h
P1-55 VLIM	Maximum Velocity - User-Defined This parameter specifies the maximum velocity. Factory setting: maximum motor speed. Setting can only be modified if power stage is disabled.	rpm 10 - 6000 Decimal	u32 RW per.	Modbus $26E_h$ EtherCAT 4137_h
P1-57 CRSHA	Torque Monitoring - Torque Value This parameter is used to configure the torque monitoring function. The torque monitoring function detects an error (AL030) if the torque value set via this parameter is exceeded for a period of time set via P1-58.	% 0 0 300 Decimal	u16 RW per.	Modbus 272_h EtherCAT 4139_h
P1-58 CRSHT	Torque Monitoring - Time Value This parameter is used to configure the torque monitoring function. The torque monitoring function detects an error (AL030) if the torque value set via P1-57 is exceeded for a period of time set via this parameter.	ms 1 1 1000 Decimal	u16 RW per.	Modbus 274_h EtherCAT $413A_h$

Parameter name	Description	Unit Minimum value Factory setting Maximum value HMI Format	Data type R/W Persistent	Parameter address via fieldbus
P1-59 VELCMDMOVEAVG	S Curve Filter for Operating Mode Profile Velocity This parameter specifies the moving average time in [us] for the S curve filter in the operating mode Profile Velocity. The value of this parameter must be a multiple of 125. This filter changes a linear acceleration into an S curve. Setting can only be modified if power stage is disabled.	us 0 0 255875 Decimal	u32 RW per.	Modbus 276_h EtherCAT $413B_h$
P1-60 COMMERRTTHRESH	Commutation Monitoring - Time Threshold	ms 0 0 3000 Decimal	u16 RW per.	Modbus 278_h EtherCAT $413C_h$
P1-61 COMMERRVTHRESH	Commutation Monitoring - Velocity Threshold	0.1rpm 0 600 60000 Decimal	u32 RW per.	Modbus $27A_h$ EtherCAT $413D_h$
P1-62 THERMODE	Motor Overtemperature Monitoring - Response This parameter specifies the response of the drive if the temperature monitoring function detects motor overtemperature. Value 0: Disable power stage immediately Value 3: Ignore overtemperature Value 4: Alert Value 5: Alert first, then detected error if condition persists after P1-63	- 0 0 5 Decimal	u16 RW per.	Modbus $27C_h$ EtherCAT $413E_h$
P1-63 THERMTIME	Motor Overtemperature Monitoring - Delay Time This parameter specifies the delay time between the detection of motor overtemperature and the transition to the operating state Fault (see P1-62).	s 0 30 300 Decimal	u16 RW per.	Modbus $27E_h$ EtherCAT $413F_h$
P1-64 UVMODE	Undervoltage Monitoring - Response This parameter specifies the response of the drive if the undervoltage monitoring function detects undervoltage. Value 0: Detected error Value 1: Alert (if power stage is enabled) Value 2: Alert first, then detected error if condition persists after P1-67 (if power stage is enabled) Value 3: Detected error (if power stage is enabled)	- 0 0 3 Decimal	u16 RW per.	Modbus 280_h EtherCAT 4140_h
P1-66 MFOLD	Status of Foldback Current Motor This parameter indicates whether the foldback current limit is greater than or less than the maximum current of the motor (see P1-78). Value 0: Foldback current limit greater than P1-78 Value 1: Foldback current limit is less than P1-78	- 0 - 1 Decimal	u16 RO -	Modbus 284_h EtherCAT 4142_h

Parameter name	Description	Unit Minimum value Factory setting Maximum value HMI Format	Data type R/W Persistent	Parameter address via fieldbus
P1-67 UVTIME	Undervoltage Monitoring - Delay Time This parameter specifies the delay time between the detection of an undervoltage condition (displayed as "u")and the response of the drive to this condition as specified in P1-64.	s 0 30 300 Decimal	u16 RW per.	Modbus 286_h EtherCAT 4143_h
P1-68 DECSTOP	Active Disable - Deceleration Ramp This parameter specifies the deceleration ramp for a power stage Disable request, see P1-32.	ms 6 30 65500 Decimal	u16 RW per.	Modbus 288_h EtherCAT 4144_h
P1-69 DECSTOPTIME	Disable - Deceleration Time This parameter specifies the deceleration ramp for a power stage Disable request, see P1-32. If the value of this parameter is not 0, this parameter overrides P1-68. Setting can only be modified if power stage is disabled.	ms 0 0 6500 Decimal	u16 RW per.	Modbus $28A_h$ EtherCAT 4145_h
P1-71 REGENMAXONTIME	Braking Resistor - Maximum Time in Braking This parameter specifies the maximum time in braking for the braking resistor. The maximum time in braking is the maximum period of time during which the braking resistor may be activated.	ms 10 40 100 Decimal	u16 RW per.	Modbus $28E_h$ EtherCAT 4147_h
P1-72 REGENFLTMODE	Braking Resistor Overload Monitoring - Response This parameter specifies the response of the drive if the braking resistor overload monitoring function detects braking resistor overload. Value 0: Alert Value 1: Detected error	- 0 0 1 Decimal	u16 RW per.	Modbus 290_h EtherCAT 4148_h
P1-78 ILIM	User-Defined Maximum Current This parameter is specifies a user-defined maximum current for the drive. The maximum value of this parameter is the value of P1-79.	0.01A - - - Decimal	u32 RW per.	Modbus $29C_h$ EtherCAT $414E_h$
P1-79 IMAX	Maximum Current This parameter indicates the maximum current for a drive / motor combination.	0.01A - - - Decimal	u32 RO -	Modbus $29E_h$ EtherCAT $414F_h$
P1-80 DIPEAK	Maximum Peak Current This parameter indicates the maximum peak current of the drive.	0.01A - - - Decimal	u32 RO -	Modbus $2A0_h$ EtherCAT 4150_h
P1-81 DICONT	Nominal Current This parameter indicates the nominal current of the drive.	0.01A - - - Decimal	u32 RO -	Modbus $2A2_h$ EtherCAT 4151_h
P1-82 CANOPEN_VEL_LIMIT	Velocity limitation for operating mode Profile Torque The limitation is effective only if P1-02 is set to 0x0001. Value 0: Reserved Value 1: Limitation via P1-09 Value 2: Limitation via P1-10 Value 3: Limitation via P1-11	- 0 0 3 Decimal	u16 RW per.	Modbus $2A4_h$ EtherCAT 4152_h

Parameter name	Description	Unit Minimum value Factory setting Maximum value HMI Format	Data type R/W Persistent	Parameter address via fieldbus
P1-84 CFG_MOTOR	Configured motor type	- 0 - 2147483647 Decimal	u32 RW per.	Modbus $2A8_h$ EtherCAT 4154_h
P1-85 CANOPEN_TRQ_LIMIT	Torque Limit For Fieldbus Modes The limitation is effective only if P1-02 is set to 0x0010. Value 0: Reserved Value 1: Limitation via P1-12 Value 2: Limitation via P1-13 Value 3: Limitation via P1-14	- 0 0 3 Decimal	u16 RW per.	Modbus $2AA_h$ EtherCAT 4155_h
P1-87 I_MAX_QUICK_STOP	Quick Stop - Maximum Current This parameter is specifies the maximum current at Quick Stop for Fieldbus modes. The limitation is effective only if P3-31 is set to 7.	0.01A - P1-79 0 Decimal	u32 RW per.	Modbus $2AE_h$ EtherCAT 4157_h

P2 - Extended Parameters

P2 - Extended Parameters

Parameter name	Description	Unit Minimum value Factory setting Maximum value HMI Format	Data type R/W Persistent	Parameter address via fieldbus
P2-01 PPR	Gain Switching - Rate for Position Loop This parameter specifies the gain switching rate for the position loop. The gain switching function is configured via this parameter and parameters P2-05, P2-27 and P2-29.	% 10 100 500 Decimal	u16 RW per.	Modbus 302_h EtherCAT 4201_h
P2-05 SPR	Gain Switching - Rate for Velocity Loop This parameter specifies the gain switching rate for the velocity loop. The gain switching function is configured via this parameter and parameters P2-01, P2-27 and P2-29.	% 10 100 500 Decimal	u16 RW per.	Modbus $30A_h$ EtherCAT 4205_h
P2-08 PCTL	Factory Reset / Save Parameters This parameter provides the following functions: - Reset the parameters to the factory settings - Save the current parameter values The factory settings do not become effective until after you have powered the drive off and on again. Value 10: Reset the parameter values to the factory settings Value 11: Save the parameter values Value 400: Normal digital output control operation mode Value 406: Force output control operation mode **NOTE:** Value 999 is displayed when the parameter values are successfully saved. Setting can only be modified if power stage is disabled.	- 0 0 406 Decimal	u16 RW -	Modbus 310_h EtherCAT 4208_h
P2-09 DRT	Debounce Time - Inputs This parameter specifies the debounce time for the digital inputs DI1 ... DI5 and DI8. See P2-24 for the debounce time for the fast digital inputs DI6 and DI7.	ms 0 2 20 Decimal	u16 RW per.	Modbus 312_h EtherCAT 4209_h

Parameter name	Description	Unit Minimum value Factory setting Maximum value HMI Format	Data type R/W Persistent	Parameter address via fieldbus
P2-10 DITF1	Signal Input Function for DI1 The parameters P2-10 ... P2-17 are used to assign signal input functions to the digital inputs DI1 ... DI8 and to configure the type of digital input (normally closed, normally open). A: Signal input functions: For the values, refer to chapter Setting the Digital Signal Inputs *(see page 268)*. B: Type: 0: Normally closed (contact b) 1: Normally open (contact a) Example: If the setting of P2-10 is 101, the signal input function assigned to digital input 1 is SON (0x01) and the type of contact is a normally open contact. The drive must be restarted after the parameters have been modified. Forcing of digital inputs is configured via P3-06 and activated via P4-07. Setting can only be modified if power stage is disabled.	- 0_h 100_h 146_h Hexadecimal	u16 RW per.	Modbus 314_h EtherCAT $420A_h$
P2-11 DITF2	Signal Input Function for DI2 See P2-10 for details. Setting can only be modified if power stage is disabled.	- 0_h 100_h 146_h Hexadecimal	u16 RW per.	Modbus 316_h EtherCAT $420B_h$
P2-12 DITF3	Signal Input Function for DI3 See P2-10 for details. Setting can only be modified if power stage is disabled.	- 0_h 100_h 146_h Hexadecimal	u16 RW per.	Modbus 318_h EtherCAT $420C_h$
P2-13 DITF4	Signal Input Function for DI4 See P2-10 for details. Setting can only be modified if power stage is disabled.	- 0_h 100_h 146_h Hexadecimal	u16 RW per.	Modbus $31A_h$ EtherCAT $420D_h$
P2-14 DITF5	Signal Input Function for DI5 See P2-10 for details. Setting can only be modified if power stage is disabled.	- 0_h 24_h 146_h Hexadecimal	u16 RW per.	Modbus $31C_h$ EtherCAT $420E_h$
P2-15 DITF6	Signal Input Function for DI6 See P2-10 for details. Setting can only be modified if power stage is disabled.	- 0_h 22_h 146_h Hexadecimal	u16 RW per.	Modbus $31E_h$ EtherCAT $420F_h$
P2-16 DITF7	Signal Input Function for DI7 See P2-10 for details. Setting can only be modified if power stage is disabled.	- 0_h 23_h 146_h Hexadecimal	u16 RW per.	Modbus 320_h EtherCAT 4210_h
P2-17 DITF8	Signal Input Function for DI8 See P2-10 for details. Setting can only be modified if power stage is disabled.	- 0_h 21_h 146_h Hexadecimal	u16 RW per.	Modbus 322_h EtherCAT 4211_h

Parameter name	Description	Unit Minimum value Factory setting Maximum value HMI Format	Data type R/W Persistent	Parameter address via fieldbus
P2-18 DOTF1	Signal Output Function for DO1 The parameters P2-18 ... P2-21 are used to assign signal output functions to the digital outputs DO1 ... DO4 and to configure the type of digital output (normally closed, normally open). 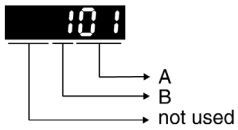 A: Signal output functions: For the values, refer to chapter Setting the Digital Signal Outputs *(see page 270)*. B: Type: 0: Normally closed (contact b) 1: Normally open (contact a) Example: If the setting of P2-18 is 101, the signal output function assigned to digital output 1 is SRDY (0x01) and the type of contact is a normally open contact.	- 0_h 101_h 137_h Hexadecimal	u16 RW per.	Modbus 324_h EtherCAT 4212_h
P2-19 DOTF2	Signal Output Function for DO2 See P2-18 for details.	- 0_h 100_h 137_h Hexadecimal	u16 RW per.	Modbus 326_h EtherCAT 4213_h
P2-20 DOTF3	Signal Output Function for DO3 See P2-18 for details.	- 0_h 100_h 137_h Hexadecimal	u16 RW per.	Modbus 328_h EtherCAT 4214_h
P2-21 DOTF4	Signal Output Function for DO4 See P2-18 for details.	- 0_h 100_h 137_h Hexadecimal	u16 RW per.	Modbus $32A_h$ EtherCAT 4215_h
P2-23 DOTF6	Signal Output Function for OCZ Only the signal output function ESIM can be assigned to the digital output OCZ. Value 0: Encoder simulation function disabled Value $40_{(h)}$: Encoder simulation function enabled Use P2-18 … P2-21 for assigning other signal output functions to the other digital outputs DO1 … DO4. See P2-18 for details.	- 0_h 40_h 137_h Hexadecimal	u16 RO per.	Modbus $32E_h$ EtherCAT 4217_h
P2-24 FDRT	Debounce Time - Fast Inputs This parameter specifies the debounce time for the digital inputs DI6 and DI7. See P2-09 for the debounce time for the digital inputs DI1 … DI5 and DI8.	us 0 50 100 Decimal	u16 RW per.	Modbus 330_h EtherCAT 4218_h

Parameter name	Description	Unit Minimum value Factory setting Maximum value HMI Format	Data type R/W Persistent	Parameter address via fieldbus
P2-27 GCC	Gain Switching - Conditions and Type This parameter specifies the conditions for and the type of gain switching. The gain switching function is configured via this parameter and parameters P2-01, P2-05 and P2-29. 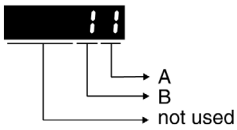 A: Conditions for gain switching: 0: Disabled 1: Signal input function GAINUP is active 2: In operating modes Profile Position, the position deviation is greater than the value of P2-29 3: Pulse frequency is greater than the value of P2-29 4: Velocity is greater than the value of P2-29 5: Signal input function GAINUP is not active 6: In operating modes Profile Position, the position deviation is less than the value of P2-29 7: Pulse frequency is less than the value of P2-29 8: Velocity is less than the value of P2-29	- 0_h 0_h 18_h Hexadecimal	u16 RW per.	Modbus 336_h EtherCAT $421B_h$
P2-29 GPE	Gain Switching - Comparison Value This parameter specifies the comparison value used for the conditions for gain switching. Depending on the selected condition, the value entered represents the number of pulses (position deviation), the pulse frequency or the velocity. The gain switching function is configured via this parameter and parameters P2-01, P2-05 and P2-27.	- 0_h 138800_h $3A9800_h$ Hexadecimal	u32 RW per.	Modbus $33A_h$ EtherCAT $421D_h$
P2-30 INH	Auxiliary Functions Value 0: Disabled Value 1: Enable the power stage	- -8 0 8 Decimal	s16 RW -	Modbus $33C_h$ EtherCAT $421E_h$
P2-31 LTNEFFORT	Autotuning Optimization Value Threshold This parameter is used to modify the gain.	0.001 100 1000 10000 Decimal	u32 RW -	Modbus $33E_h$ EtherCAT $421F_h$
P2-32 ATMODE	Autotuning This parameter is used to start autotuning with the selected autotuning method. Value 0: Stop Autotuning Value 1: Easy Tuning Value 2: Comfort Tuning [minimum settling time, vibration suppression] Value 3: Comfort Tuning [minimum overshoot, vibration suppression] Value 52: Comfort Tuning [minimum settling time, no vibration suppression] Value 53: Comfort Tuning [minimum overshoot, no vibration suppression]	- 0 0 56 Decimal	u16 RW -	Modbus 340_h EtherCAT 4220_h

Parameter name	Description	Unit Minimum value Factory setting Maximum value HMI Format	Data type R/W Persistent	Parameter address via fieldbus
P2-34 VEMAX	Velocity Monitoring - Threshold Value This parameter specifies the velocity threshold for the velocity monitoring function. If this value is exceeded, error AL555 is detected.	0.1rpm 0 50000 60000 Decimal	u32 RW per.	Modbus 344_h EtherCAT 4222_h
P2-35 PDEV	Position Deviation Monitoring - Threshold Value This parameter specifies the position deviation threshold for the position deviation monitoring function. If this value is exceeded, error AL009 is detected.	10*pulse 1 100000 12800000 Decimal	u32 RW per.	Modbus 346_h EtherCAT 4223_h
P2-65 GBIT	Special Function 1 Bits 0 … 5: Reserved (must be set to 0). Bit 6: Reference pulse monitoring ● 0: Function activated ● 1: Function deactivated Bit 7: Pulse signal monitoring ● 0: Function deactivated (AL534) ● 1: Function activated Bit 8: Motor overload monitoring ● 0: Function deactivated (AL006) ● 1: Function activated Bit 9: Motor phase monitoring ● 0: Function deactivated ● 1: Function activated Bits 10: Reserved (must be set to 0).	- 0_h 200_h $FFC0_h$ Hexadecimal	u16 RW per.	Modbus 382_h EtherCAT 4241_h
P2-65(continued)	Bit 11: NL(CWL)/PL(CCWL) pulse input inhibit function ● 0: Function activated ● 1: Function deactivated If P8-31 is set to 1 or 3 and if a hardware limit switch is triggered, a Fault Reset clears the missing master pulses. Only use the pulse inhibit function with settings 1 or 3 of P8-31 if you do not need a Fault Reset after a detected hardware limit switch error. To achieve this, set the Automatic Fault Reset function of P2-68 to 1. Bit 12: Mains phase monitoring ● 0: Function activated (AL022) ● 1: Function deactivated Bit 13: Encoder simulation output monitoring ● 0: Function activated (AL018) ● 1: Function deactivated Bit 14: Unit of P8-33 ● 0: P8-33 is in Hz ● 1: P8-33 is in 0.01Hz Bit 15: Reserved (must be set to 0).			
P2-66 GBIT2	Special Function 2 Bits 0 … 1: Reserved (must be set to 0). Bit 2: This bit specifies the type of Fault Reset after a detected undervoltage error has been removed. 0: No automatic Fault Reset 1: Automatic Fault Reset Bits 3 … 7: Reserved (must be set to 0).	- 0 0 4 Decimal	u16 RW per.	Modbus 384_h EtherCAT 4242_h

Parameter name	Description	Unit Minimum value Factory setting Maximum value HMI Format	Data type R/W Persistent	Parameter address via fieldbus
P2-68 AEAL	Auto-Enable and Automatic Hardware Limit Switch Fault Reset 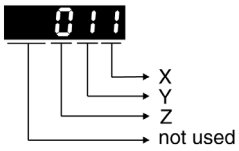 X: Automatic power stage enabling 0: Trigger SON to enable power stage 1: Enable power stage automatically if SON is active after drive has been powered on 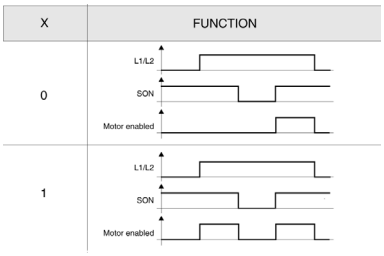 Y: Automatic Fault Reset for limit switches 0: Detected hardware limit switch error (AL014 and AL015) requires Fault Reset 1: Detected hardware limit switch error (AL014 and AL015) can be reset without Fault Reset 0: No detected error 1: Detected error, Fault Reset required Modified settings become active the next time the product is powered on.	- 0_h 100_h 111_h Hexadecimal	u16 RW per.	Modbus 388_h EtherCAT 4244_h

P3 - Communication Parameters

P3 - Communication Parameters

Parameter name	Description	Unit Minimum value Factory setting Maximum value HMI Format	Data type R/W Persistent	Parameter address via fieldbus
P3-00 ADR	Device Address Modbus The device address must be unique. Modified settings become active the next time the product is powered on.	- 1 127 247 Decimal	u16 RW per.	Modbus 400_h EtherCAT 4300_h
P3-01 BRT	Transmission Rate This parameter is used to set the data transmission rate. For further information, refer to chapter Setting the Device Address, Baud Rate and Connection Settings *(see page 191)*. Modified settings become active the next time the product is powered on.	- 0_h 2_h 5_h Hexadecimal	u16 RW per.	Modbus 402_h EtherCAT 4301_h
P3-02 PTL	Modbus Connection Settings This parameter specifies the Modbus connection settings. For further information, refer to chapter Setting the Device Address, Baud Rate and Connection Settings *(see page 191)*. Modified settings become active the next time the product is powered on.	- 6_h 7_h 9_h Hexadecimal	u16 RW per.	Modbus 404_h EtherCAT 4302_h
P3-03 FLT	Detected Modbus Communication Errors - Handling This parameter specifies the response of the drive to a detected communication error. Value 0: Detected alert Value 1: Detected error	- 0_h 0_h 1_h Hexadecimal	u16 RW per.	Modbus 406_h EtherCAT 4303_h
P3-04 CWD	Modbus Connection Monitoring This parameter specifies the maximum permissible duration for communication timeout. When this time has elapsed, the communication timeout is treated as a detected error. Setting this parameter to 0 to disables connection monitoring.	ms 0 0 20000 Decimal	u16 RW per.	Modbus 408_h EtherCAT 4304_h
P3-05 CMM	Device Address Fieldbus This parameter specifies the fieldbus address of the drive in decimal format. The device address must be unique. Changes to this parameter become effective only after a restart of the drive. Modified settings become active the next time the product is powered on.	- 0 0 127 Decimal	u16 RW per.	Modbus $40A_h$ EtherCAT 4305_h
P3-06 SDI	Digital Inputs - Forcing Settings This parameter determines whether or not a digital input can be forced. Bits 0 ... 7: Digital input DI1 ... digital input DI8 Bit settings: Value 0: Digital input cannot be forced Value 1: Digital input can be forced To actually start forcing, you must write P4-07. See P2-10 ... P2-17 for the assignment of signal input functions to the digital inputs.	- 0_h 0_h $7FF_h$ Hexadecimal	u16 RW -	Modbus $40C_h$ EtherCAT 4306_h

Parameter name	Description	Unit Minimum value Factory setting Maximum value HMI Format	Data type R/W Persistent	Parameter address via fieldbus
P3-07 CDT	Modbus Response Delay Time This parameter specifies the time delay with which the drive responds to the Modbus master.	0.5ms 0 0 1000 Decimal	u16 RW per.	Modbus $40E_h$ EtherCAT 4307_h
P3-08 PROTOCOL	Fieldbus protocol This parameter specifies the active communication protocol. 0: No protocol selected. 3: EtherCAT protocol selected.	- 0_h 0_h 3_h Hexadecimal	u16 RW per.	Modbus 410_h EtherCAT 4308_h
P3-30 INTRN_LIM_SRC	Internal Limit for Bit 11 DriveCom Status Word 6041_h This parameter assigns a status information to bit 11 (internal limit active) of the parameter Statusword 6041_h. Value 0: None: Not used (reserved) Value 1: Current Below Threshold: Current threshold value Value 2: Velocity Below Threshold: Velocity threshold value Value 3: In Position Deviation Window: Position deviation window Value 4: In Velocity Deviation Window: Velocity deviation window Value 9: Hardware Limit Switch: Hardware limit switch Value 11: Position Window: Position window	- 0 0 11 Decimal	u16 RW per.	Modbus $43C_h$ EtherCAT $431E_h$
P3-31 QSOC	Settings for ESM operating state Quick Stop Value -2: Slow down on torque ramp and switch to Operating State Fault Value -1: Slow down on Quick Stop ramp and switch to Operating State Fault Value 6: Slow down on Quick Stop ramp and stay in Quick stop Active Value 7: Slow down on current limit and stay in Quick stop Active	- -2 -1 7 Decimal	s16 RW per.	Modbus $43E_h$ EtherCAT $431F_h$
P3-32 SOD2RTSO	Automatic operating state transition from Switch On Disabled to Ready To Switch On Value 0: Automatic transition Value 1: Transition according to value of EtherCAT control word	- 0_h 0_h 1_h Hexadecimal	u16 RW per.	Modbus 440_h EtherCAT 4320_h

P4 - Diagnostics Parameters

P4 - Diagnostics Parameters

Parameter name	Description	Unit Minimum value Factory setting Maximum value HMI Format	Data type R/W Persistent	Parameter address via fieldbus
P4-00 ASH1	Error History - Error Code of Most Recent Detected Error n This parameter indicates the error code of the most recent detected error. Writing 0 to this parameter clears the error history.	- 0_h 0_h $FFFF_h$ Hexadecimal	u16 RW -	Modbus 500_h EtherCAT 4400_h
P4-01 ASH2	Error History - Error Code of Most Recent Detected Error n - 1 This parameter indicates the error code of the detected error n-1, n being the most recent detected error.	- 0_h 0_h $FFFF_h$ Hexadecimal	u16 RO -	Modbus 502_h EtherCAT 4401_h
P4-02 ASH3	Error History - Error Code of Most Recent Detected Error n - 2 This parameter indicates the error code of the detected error n-2, n being the most recent detected error.	- 0_h 0_h $FFFF_h$ Hexadecimal	u16 RO -	Modbus 504_h EtherCAT 4402_h
P4-03 ASH4	Error History - Error Code of Most Recent Detected Error n - 3 This parameter indicates the error code of the detected error n-3, n being the most recent detected error.	- 0_h 0_h $FFFF_h$ Hexadecimal	u16 RO -	Modbus 506_h EtherCAT 4403_h
P4-04 ASH5	Error History - Error Code of Most Recent Detected Error n - 4 This parameter indicates the error code of the detected error n-4, n being the most recent detected error.	- 0_h 0_h $FFFF_h$ Hexadecimal	u16 RO -	Modbus 508_h EtherCAT 4404_h
P4-05 JOG	Jog Velocity For further information, refer to chapter Jog Operation *(see page 301)*.	rpm 0 20 5000 Decimal	u32 RW per.	Modbus $50A_h$ EtherCAT 4405_h
P4-06 FOT	Forcing Matrix of Digital Outputs This parameter lets you set those signal outputs whose signal output functions have been set to SDO_0 … SDO_3. Bit 0 = 1 sets those signal outputs whose signal output function has been set to SDO_0. Bit 1 = 1 sets those signal outputs whose signal output function has been set to SDO_1. Bit 2 = 1 sets those signal outputs whose signal output function has been set to SDO_2. Bit 3 = 1 sets those signal outputs whose signal output function has been set to SDO_3. See P2-18 ... P2-21 for assigning the functions to the digital outputs.	- 0_h 0_h FF_h Hexadecimal	u16 RW -	Modbus $50C_h$ EtherCAT 4406_h

Parameter name	Description	Unit Minimum value Factory setting Maximum value HMI Format	Data type R/W Persistent	Parameter address via fieldbus
P4-07 ITST	State of Digital Inputs / Activate Forcing A read access to this parameter indicates the state of the digital inputs in the form of a bit pattern. Example: Read value 0x0011: Digital inputs 1 and 5 are logical 1 By writing this parameter, you can modify the state of the inputs provided that the setting for the corresponding input in P3-06 allows for forcing (value 1 for the bit corresponding to the input). Example: Write value 0x0011: Digital inputs 1 and 5 are set to logical 1, regardless of the previous state See P3-06 for permitting forcing of individual digital inputs. See P2-10 ... P2-17 for the assignment of signal input functions to the digital inputs.	- 0_h 0_h FF_h Hexadecimal	u16 RW -	Modbus $50E_h$ EtherCAT 4407_h
P4-08 PKEY	Status of HMI Keypad This parameter is used to verify proper operation of the keys on the HMI keypad of the drive As a bitwise: ● "1" - key is pressed, ● "0" - key is released. When: ● **S** key is indicated by bit0 ● **M** key is indicated by bit1 ● **UP** key is indicated by bit2 ● **DOWN** key is indicated by bit3 ● **ENT** key is indicated by bit4	- 0_h 0_h FF_h Hexadecimal	u16 RO -	Modbus 510_h EtherCAT 4408_h
P4-09 MOT	State of Digital Outputs This parameter indicates the state of the digital outputs DO1…DO6. Bit 0 = 1: DO1 is activated Bit 1 = 1: DO2 is activated Bit 2 = 1: DO3 is activated Bit 3 = 1: DO4 is activated Bit 4 = 1: Reserved Bit 5 = 1: OCZ is activated	- 0_h 0_h $3F_h$ Hexadecimal	u16 RO -	Modbus 512_h EtherCAT 4409_h
P4-10 FLTHISTCLR	Clear Error History Writing 0 to this parameter clears the error history.	- 0 0 0 Decimal	u16 RW -	Modbus 514_h EtherCAT $440A_h$
P4-24 LVL	Undervoltage Monitoring - Threshold Value This parameter specifies the threshold value for DC bus undervoltage monitoring. If the DC Bus voltage is less than the value of P4-24 x 2, the error AL003 is detected.	V 140 160 190 Decimal	u16 RW per.	Modbus 530_h EtherCAT 4418_h

Parameter name	Description	Unit Minimum value Factory setting Maximum value HMI Format	Data type R/W Persistent	Parameter address via fieldbus
P4-25 STO	Safety Function STO - Status This parameter indicates the status of the safety function STO. Bit 0 = 0: Safety function STO triggered Bit 0 = 1: Safety function STO not triggered or deactivated via jumper at CN9	- 0 - 1 Decimal	u16 RO -	Modbus 532_h EtherCAT 4419_h
P4-26 DO_FORCEABLE	Forceable digital outputs This parameter shows whether or not a digital output can be forced. Bits 0 … 3: Digital output DO1 … digital output DO4 Bit settings: Value 0: Digital output cannot be forced Value 1: Digital output can be forced	- F_h F_h F_h Hexadecimal	u16 RO -	Modbus 534_h EtherCAT $441A_h$
P4-27 DO_FORCE_MASK	Digital output force mask This parameter contains a mask that determines whether or not a digital output can be forced. Bits 0 … 3: Digital output DO1 … digital output DO4 Bit settings: Value 0: Digital output cannot be forced Value 1: Digital output can be forced To actually start forcing, you must write P4-28. See P2-18 … P2-21 for the assignment of signal output functions to the digital outputs.	- 0_h 0_h F_h Hexadecimal	u16 RW -	Modbus 536_h EtherCAT $441B_h$
P4-28 DO_FORCE_VALUE	Digital output force value A read access to this parameter indicates the state of the digital outputs in the form of a bit pattern. Example: Read value 0x0011: Digital output 1 is logical 1 By writing this parameter, you can modify the state of the outputs provided that the setting for the corresponding output in P4-27 allows for forcing (value 1 for the bit corresponding to the output). Example: Write value 0x0011: Digital output 1 is set to logical 1, regardless of the previous state See P4-27 for permitting forcing of individual digital outputs. See P2-18 … P2-21 for the assignment of signal output functions to the digital outputs.	- 0_h 0_h F_h Hexadecimal	u16 RW -	Modbus 538_h EtherCAT $441C_h$
P4-29 LOAD_PERIOD_TIME	Motor Load Period Time This parameter specifies the time period in which the average load will be calculated. Modified settings become active the next time the product is powered on.	ms 1 5000 100000 Decimal	u32 RW per.	Modbus $53A_h$ EtherCAT $441D_h$

P5 - Motion Settings

P5- Motion Settings

Parameter name	Description	Unit Minimum value Factory setting Maximum value HMI Format	Data type R/W Persistent	Parameter address via fieldbus
P5-00 REV	Firmware Revision This parameter contains the revision number of the firmware.	- 0_h 0_h $FFFF_h$ Hexadecimal	u16 RO -	Modbus 600_h EtherCAT 4500_h
P5-08 POSLIMPOS	Positive Software Limit Switch - Position Prerequisite: Software limit switches only work with a valid zero point. Setting can only be modified if power stage is disabled.	PUU -2147483647 134217727 2147483647 Decimal	s32 RW per.	Modbus 610_h EtherCAT 4508_h
P5-09 POSLIMNEG	Negative Software Limit Switch - Position Prerequisite: Software limit switches only work with a valid zero point. Setting can only be modified if power stage is disabled.	PUU -2147483647 -134217727 2147483647 Decimal	s32 RW per.	Modbus 612_h EtherCAT 4509_h
P5-11 POSLIMHYST	Software Limit Switches - Hysteresis Value This parameter specifies a hysteresis value for the software limit switches. Setting can only be modified if power stage is disabled.	PULSE 0 3556 35555 Decimal	u16 RW per.	Modbus 616_h EtherCAT $450B_h$
P5-12 PROBE_1_LVL_PRD	Touch Probe Input 1 - Stable Level Duration This parameter specifies the period of time for which the level at Touch Probe input 1 must be stable.	31.25 µs 2 5 32 Decimal	u16 RW per.	Modbus 618_h EtherCAT $450C_h$
P5-13 POSLIMMODE	Software Limit Switches - Activation This parameter activates/deactivates the software limit switches configured via P5-08 and P5-09. Prerequisite: Software limit switches only work with a valid zero point. Value 0: Deactivate software limit switches Value 1: Activate software limit switches Value 2…3: Reserved	- 0 0 1 Decimal	u16 RW per.	Modbus $61A_h$ EtherCAT $450D_h$
P5-14 ICMDSLOPE	Motion Profile for Torque - Slope This parameter specifies the slope of the motion profile for torque.	mA/s 1 100000 30000000 Decimal	u32 RW per.	Modbus $61C_h$ EtherCAT $450E_h$
P5-15 ICMDSLOPEEN	Motion Profile for Torque - Activation This parameter activates the motion profile for torque. Value 0: Deactivate Value 1: Activate Setting can only be modified if power stage is disabled.	- 0 0 1 Decimal	u16 RW per.	Modbus $61E_h$ EtherCAT $450F_h$
P5-16 AXEN	Encoder Increments in PUU Setting can only be modified if power stage is disabled. This parameter specifies an offset to the encoder position.	PUU -2147483647 0 2147483647 Decimal	s32 RW -	Modbus 620_h EtherCAT 4510_h

Parameter name	Description	Unit Minimum value Factory setting Maximum value HMI Format	Data type R/W Persistent	Parameter address via fieldbus
P5-21 CTO	Deceleration Ramp - Detected Transmission Error This parameter specifies the deceleration ramp for a stop triggered if a transmission error is detected. The deceleration period is the time in milliseconds required to decelerate from 6000 rpm to motor standstill. It is used to set the deceleration ramp.	ms 6 50 65500 Decimal	u16 RW per.	Modbus $62A_h$ EtherCAT 4515_h
P5-22 OVF	Deceleration Ramp - Position Overflow This parameter specifies the deceleration ramp for a stop triggered if a position overflow is detected. The deceleration period is the time in milliseconds required to decelerate from 6000 rpm to motor standstill. It is used to set the deceleration ramp.	ms 6 30 65500 Decimal	u16 RW per.	Modbus $62C_h$ EtherCAT 4516_h
P5-23 SNL	Deceleration Ramp - Triggering of Negative Software Limit Switch This parameter specifies the deceleration ramp for a stop triggered if the negative software limit switch is activated. The deceleration period is the time in milliseconds required to decelerate from 6000 rpm to motor standstill. It is used to set the deceleration ramp.	ms 6 50 65500 Decimal	u16 RW per.	Modbus $62E_h$ EtherCAT 4517_h
P5-24 SPL	Deceleration Ramp - Triggering of Positive Software Limit Switch This parameter specifies the deceleration ramp for a stop triggered if the positive software limit switch is activated. The deceleration period is the time in milliseconds required to decelerate from 6000 rpm to motor standstill. It is used to set the deceleration ramp.	ms 6 50 65500 Decimal	u16 RW per.	Modbus 630_h EtherCAT 4518_h
P5-25 NL	Deceleration Ramp - Triggering of Negative Hardware Limit Switch This parameter specifies the deceleration ramp for a stop triggered if the negative hardware limit switch is activated. The deceleration period is the time in milliseconds required to decelerate from 6000 rpm to motor standstill. It is used to set the deceleration ramp.	ms 6 30 65500 Decimal	u16 RW per.	Modbus 632_h EtherCAT 4519_h
P5-26 PL	Deceleration Ramp - Triggering of Positive Hardware Limit Switch This parameter specifies the deceleration ramp for a stop triggered if the positive hardware limit switch is activated. The deceleration period is the time in milliseconds required to decelerate from 6000 rpm to motor standstill. It is used to set the deceleration ramp.	ms 6 30 65500 Decimal	u16 RW per.	Modbus 634_h EtherCAT $451A_h$
P5-35 PROBES_POLARITY	Touch Probes Polarity This parameter specifies the touch probes polarity.	- 0 - 3 Decimal	u16 RO per.	Modbus 646_h EtherCAT 4523_h

Parameter name	Description	Unit Minimum value Factory setting Maximum value HMI Format	Data type R/W Persistent	Parameter address via fieldbus
P5-36 CAAX_CANOPEN	Touch Probe Input 1 - Captured Position EtherCAT Units This parameter contains the position captured at Touch Probe input 1.	CANopen PU -2147483647 - 2147483647 Decimal	s32 RO per.	Modbus 648_h EtherCAT 4524_h
P5-37 CAAX	Touch Probe Input 1 - Captured Position This parameter contains the position captured at Touch Probe input 1.	PUU -2147483647 0 2147483647 Decimal	s32 RO -	Modbus $64A_h$ EtherCAT 4525_h
P5-38 PROBE1_CNTR	Touch Probe Input 1 - Event Counter The value is increased by 1 each time a position has been captured at Touch Probe input 1.	- 0 0 65535 Decimal	u16 RO -	Modbus $64C_h$ EtherCAT 4526_h
P5-39 CACT	Touch Probe Input 1 - Configuration X: Activate/deactivate position capture 0: Deactivate 1: Activate (is reset to 0 when the counter in P5-38 is incremented) Y: Reserved U: Reserved Z: Polarity of Touch Probe input 0: Normally open 1: Normally closed Where X is the least significant half-byte and U is the most significant half-byte of the X/Y/U/Z Integer.	- 0_h 0_h 101_h Hexadecimal	u16 RW -	Modbus $64E_h$ EtherCAT 4527_h
P5-56 CAAX2_CANOPEN	Touch Probe Input 2 - Captured Position EtherCAT Units This parameter contains the position captured at Touch Probe input 2.	CANopen PU -2147483647 - 2147483647 Decimal	s32 RO per.	Modbus 670_h EtherCAT 4538_h
P5-57 CAAX2	Touch Probe Input 2 - Captured Position This parameter contains the position captured at Touch Probe input 2.	PUU -2147483647 0 2147483647 Decimal	s32 RO -	Modbus 672_h EtherCAT 4539_h
P5-58 PROBE2_CNTR	Touch Probe Input 2 - Event Counter The value is increased by 1 each time a position has been captured at Touch Probe input 2.	- 0 0 65535 Decimal	u16 RO -	Modbus 674_h EtherCAT $453A_h$
P5-59 CACT2	Touch Probe Input 2 - Configuration X: Activate/deactivate position capture 0: Deactivate 1: Activate (is reset to 0 when the counter in P5-58 is incremented) Y: Reserved Z: Polarity of Touch Probe input 0: Normally open 1: Normally closed U: Reserved	- 0_h 0_h 101_h Hexadecimal	u16 RW -	Modbus 676_h EtherCAT $453B_h$
P5-76 HOME_OFFSET_MOVE	Move Home Offset When Homing This parameter activate/deactivate a movement to a configured home offset position when the homing position is reached.	- 0 0 1 Decimal	u16 RW per.	Modbus 698_h EtherCAT $454C_h$

Parameter name	Description	Unit Minimum value Factory setting Maximum value HMI Format	Data type R/W Persistent	Parameter address via fieldbus
P5-77 PROBE_2_LVL_PRD	Touch Probe Input 2 - Stable Level Duration This parameter specifies the period of time for which the level at Touch Probe input 2 must be stable.	31.25 µs 2 5 32 Decimal	u16 RW per.	Modbus $69A_h$ EtherCAT $454D_h$

P8 - Control Loops

P8 - Control Loops

Parameter name	Description	Unit Minimum value Factory setting Maximum value HMI Format	Data type R/W Persistent	Parameter address via fieldbus
P8-00 LTND	Derivative Gain This parameter is used to adjust the derivative gain. Refer to chapter Manual Tuning *(see page 205)*.	0.1Hz 0 800 20000 Decimal	u32 RW per.	Modbus 900_h EtherCAT 4800_h
P8-01 LTNI	Integral Gain This parameter is used to adjust the integral gain. Refer to chapter Manual Tuning *(see page 205)*.	0.1Hz 0 100 2000 Decimal	u32 RW per.	Modbus 902_h EtherCAT 4801_h
P8-02 LTNIV	Derivative-Integral Gain This parameter is used to adjust the derivative-integral gain. Refer to chapter Manual Tuning *(see page 205)*.	0.1Hz 0 400 4000 Decimal	u32 RW per.	Modbus 904_h EtherCAT 4802_h
P8-03 LTNP	Proportional Gain This parameter is used to adjust the proportional gain. Refer to chapter Manual Tuning *(see page 205)*.	0.1Hz 0 300 4000 Decimal	u32 RW per.	Modbus 906_h EtherCAT 4803_h
P8-04 LTNUSERGAIN	Global Gain	0.001 100 500 3000 Decimal	u32 RW per.	Modbus 908_h EtherCAT 4804_h
P8-05 NLAFFLPFHZ	LTN Spring Filter This parameter is used to set a low-pass filter for the acceleration profile during tuning. Refer to chapter Manual Tuning *(see page 205)*.	Hz 10 7000 7000 Decimal	u16 RW per.	Modbus $90A_h$ EtherCAT 4805_h
P8-06 NLANTIVIBGAIN	Anti-Vibration Gain	Rad*10-3/N 0 0 10000 Decimal	u32 RW per.	Modbus $90C_h$ EtherCAT 4806_h
P8-07 NLANTIVIBGAIN2	Pe filter This parameter is used to set the gain of the Pe filter.	0.001 0 0 99000 Decimal	u32 RW per.	Modbus $90E_h$ EtherCAT 4807_h
P8-08 NLANTIVIBHZ	Anti-Vibration Filter This parameter is used to set the frequency to remove while using the anti-vibration filter.	0.1Hz 50 4000 4000 Decimal	u32 RW per.	Modbus 910_h EtherCAT 4808_h
P8-09 NLANTIVIBHZ2	Pe filter This parameter is used to set the frequency to remove with the Pe filter.	0.1Hz 50 4000 8000 Decimal	u32 RW per.	Modbus 912_h EtherCAT 4809_h
P8-10 NLANTIVIBLMJR	Ratio of Load Inertia to Motor Inertia for Anti-Vibration Expert parameter for the internal control loop.	0.1 0 0 6000 Decimal	u32 RW per.	Modbus 914_h EtherCAT $480A_h$

Parameter name	Description	Unit Minimum value Factory setting Maximum value HMI Format	Data type R/W Persistent	Parameter address via fieldbus
P8-11 NLANTIVIBN	NL Anti-Resonance Filter Divider Expert parameter for the internal control loop.	0.01 1 200 10000 Decimal	u32 RW per.	Modbus 916_h EtherCAT $480B_h$
P8-12 NLANTIVIBSHARP	Anti-Resonance Sharpness Expert parameter for the internal control loop.	0.001 10 500 10000 Decimal	u16 RW per.	Modbus 918_h EtherCAT $480C_h$
P8-13 NLANTIVIBSHARP2	Pe Sharpness This parameter is used to optimize the Pe filter action.	0.001 10 500 10000 Decimal	u16 RW per.	Modbus $91A_h$ EtherCAT $480D_h$
P8-14 NLFILTDAMPING	Current Filter Damping For further details, refer to Manual Tuning *(see page 205)*.	% 0 0 100 Decimal	u16 RW per.	Modbus $91C_h$ EtherCAT $480E_h$
P8-15 NLFILTT1	Current Filter Low Pass Filter Rise Time For further details, refer to Manual Tuning *(see page 205)*.	0.01ms 0 300 3000 Decimal	u16 RW per.	Modbus $91E_h$ EtherCAT $480F_h$
P8-16 NLNOTCH2BW	Current Filter - Second Notch Filter Bandwidth	Hz 0 0 500 Decimal	u16 RW per.	Modbus 920_h EtherCAT 4810_h
P8-17 NLNOTCH2CENTER	Current Filter - Second Notch Filter Center	Hz 5 100 1800 Decimal	u16 RW per.	Modbus 922_h EtherCAT 4811_h
P8-18 NLNOTCHBW	Current Filter - Notch Filter Bandwidth	Hz 0 0 500 Decimal	u16 RW per.	Modbus 924_h EtherCAT 4812_h
P8-19 NLNOTCHCENTER	Current Filter - Notch Filter Center For further details, refer to Manual Tuning *(see page 205)*.	Hz 5 100 1800 Decimal	u16 RW per.	Modbus 926_h EtherCAT 4813_h
P8-20 NLPEAFF	Elasticity Compensation This parameter is used in the compensation of the elasticity of the mechanical system. For further details, refer to Manual Tuning *(see page 205)*.	0.1Hz 0 50000 50000 Decimal	u32 RW per.	Modbus 928_h EtherCAT 4814_h
P8-21 NLPEDFFRATIO	Spring Deceleration Ratio This parameter is used in the compensation of the elasticity of the mechanical system. For further details, refer to Manual Tuning *(see page 205)*.	0.001 0 1000 2000 Decimal	u16 RW per.	Modbus $92A_h$ EtherCAT 4815_h

Parameter name	Description	Unit Minimum value Factory setting Maximum value HMI Format	Data type R/W Persistent	Parameter address via fieldbus
P8-32 MOVESMOOTHAVG	S-Curve Setting for Profile Position Setting can only be modified if power stage is disabled. The maximum value is reduced to 12800 if P8-35 CONTROLMODE (high byte) is set to 5.	0.01ms 25 400 25600 Decimal	u32 RW per.	Modbus 940_h EtherCAT 4820_h
P8-33 MOVESMOOTHLPFHZ	Low Pass Filter Setting for Profile Position The unit is modified to 0.01Hz if P2-65 GBIT Bit 14 is set to 1.	Hz 1 5000 500000 Decimal	u32 RW per.	Modbus 942_h EtherCAT 4821_h
P8-34 MOVESMOOTHMODE	Smoothing Filter for Profile Position Value 0: No smoothing Value 1: LPF smoothing Value 2: S-curve smoothing Setting can only be modified if power stage is disabled.	- 0 2 2 Decimal	u16 RW per.	Modbus 944_h EtherCAT 4822_h
P8-35 CONTROLMODE	Type of Velocity Control Type of Position Control This parameter specifies: ● the position control mode (high byte) ❍ value 2: Position control mode 2 (Sample rate 4 kHz) ❍ value 5: Position control mode 5 (Sample rate 8 kHz) ❍ value 40: Linear position control ● the type of velocity (low byte) ❍ value 1: Linear velocity control ❍ value 5: Velocity control with integral gain (P8-01, P8-02) ❍ value 6: Velocity control without integral gain ❍ value 7: Velocity control with P8-00 = P8-01, P8-02 = 0, P8-03 = 0 Setting can only be modified if power stage is disabled.	- 5_h 207_h 4001_h Hexadecimal	u16 RW per.	Modbus 946_h EtherCAT 4823_h
P8-36 NLANTIVIBGAIN3	Pe filter 3 This parameter is used to set the gain of the Pe filter 3	0.001 0 0 6000 Decimal	u32 RW per.	Modbus 948_h EtherCAT 4824_h
P8-37 NLANTIVIBHZ3	Pe filter 3 This parameter is used to set the frequency to remove with the Pe filter 3.	0.1Hz 50 4000 8000 Decimal	u32 RW per.	Modbus $94A_h$ EtherCAT 4825_h
P8-38 NLANTIVIBQ3	Pe filter 3 This parameter is used to set the zero-pole alignment with the Pe filter 3.	0.001 200 1000 10000 Decimal	u32 RW per.	Modbus $94C_h$ EtherCAT 4826_h
P8-39 IGRAV	Gravity Compensation This parameter is used to set the gravity compensation current for unbalanced systems.	0.01A - 0 - Decimal	s16 RW per.	Modbus $94E_h$ EtherCAT 4827_h

Parameter name	Description	Unit Minimum value Factory setting Maximum value HMI Format	Data type R/W Persistent	Parameter address via fieldbus
P8-40 LTNAFRC	LTN AFF This parameter is used to set the feed forward term for the current command.	- 0 0 200 Decimal	u16 RW per.	Modbus 950_h EtherCAT 4828_h
P8-41 NLANTIVIBSHARP3	Pe Sharpness This parameter is used to optimize the Pe filter 3 action.	- 10 200 10000 Decimal	u16 RW per.	Modbus 952_h EtherCAT 4829_h
P8-42 HOME_FAILURE_IND	Homing Error Information This parameter provides information in case of the homing is not successful.	- 0 - $FFFFFFFF_h$ Hexadecimal	u32 RO -	Modbus 954_h EtherCAT $482A_h$
P8-43 ZSPDLPFHZ	ZSPD Low Pass Filter Value This parameter sets the low pass filter value for ZSPD output in order to reduce jitters when the motor speed is around the Zero speed Threshold (P1-38) value.	Hz 10 1000 1000 Decimal	u16 RW per.	Modbus 956_h EtherCAT $482B_h$
P8-44 MT_COMMANDS	Send commands to multi turn encoder Value 0: No command to send. Value 1:Clear the battery detected error on the encoder. Value 2: Reset the number of accumulated revolutions of the encoder to zero.	- 0 - 2 Decimal	u16 RW -	Modbus 958_h EtherCAT $482C_h$
P8-45 FEEDBACKTYPE	Feedback type Value 0: No feedback connected or undetermined feedback connected. Value 1: Single turn encoder. Value 2: Multi turn encoder.	- 0 - 2 Decimal	u16 RO -	Modbus $95A_h$ EtherCAT $482D_h$
P8-46 SRVSNS_TEMPERATURE	Encoder temperature	Deg. - - - Decimal	s16 RO -	Modbus $95C_h$ EtherCAT $482E_h$
P8-47 SRVSNS_VER	Encoder firmware and hardware versions The format is: ZZaabbcc ● aa.bb.cc: firmware version. ● ZZ: hardware version.	- - - 4294967295 Decimal	u32 RO -	Modbus $95E_h$ EtherCAT $482F_h$

Parameter name	Description	Unit Minimum value Factory setting Maximum value HMI Format	Data type R/W Persistent	Parameter address via fieldbus
P8-48 SRVSNS_FLTS	Encoder errors ● Bit 0: The returned position values are no longer considered as reliable. ● Bit 1: The device temperature is too high. ● Bit 2: The device temperature is too low. ● Bit 3: The device is not calibrated or the calibration data is corrupted. The device is not able to decode the position. ● Bit 4: The device supply voltage has dropped under operational value. ● Bit 5: The multi turn encoder battery voltage has dropped under 3 Vdc. ● Bit 6: The multi turn encoder requires an explicit configuration command. ● Bit 7: Internal position synchronization error detected between the multi turn and the single turn modules. ● Bit 8:Generic error code of the multi turn module is detected. ● Bit 16…23: Internal Error detected. ● Bit 24: The encoder firmware cannot operate on the provided hardware. ● Bit 25…31: Reserved.	- - - 4294967295 Hexadecimal	u32 RO -	Modbus 960_h EtherCAT 4830_h

Parameter name	Description	Unit Minimum value Factory setting Maximum value HMI Format	Data type R/W Persistent	Parameter address via fieldbus
P8-49 SRVSNS_WRNS	Encoder alerts ● Bit 0: The device temperature is too high. ● Bit 1: The device temperature is too low. ● Bit 2: Over speed. ● Bit 3: Over acceleration. ● Bit 4: Invalid checksum value detected on non-volatile memory initialization. ● Bit 5: non-volatile memory is empty. ● Bit 6: Internal Parameters area detected as invalid, default values are used. ● Bit 7: Invalid decoding sequence detected. ● Bit 8: Encoder internal flash error detected. ● Bit 9: The device has detected unusual high shaft displacement. Position error might be greater than usual. ● Bit 10: The multi turn encoder battery voltage is in the range 3000 … 3150 mVdc. ● Bit 11: Reserved. ● Bit 12: The multi turn encoder counter exceeded the range of signed 16 bit value (-32767 … 32768). The warning remains active until MT_COMMANDS (P8-44) is set to 2. The multi turn encoder counter continues to count in the range 0 … 65535. ● Bit 13…31: Reserved.	- - - 4294967295 Hexadecimal	u32 RO -	Modbus 962_h EtherCAT 4831_h
P8-51 SPDOBSRVRMODE	Speed Observer Mode Value 0: Speed feedback value is computed by the drive. Value 3:Speed feedback value is measured by the encoder.	- 0 0 3 Decimal	u16 RW per.	Modbus 966_h EtherCAT 4833_h
P8-53 KPP	Position Linear Controller Proportional Gain This parameter sets the value of the proportional gain for the linear position controller.	0.1 rps/rev 0 300 12000 Decimal	u16 RW per.	Modbus $96A_h$ EtherCAT 4835_h
P8-54 KPVFR	Position Velocity Feedforward This parameter sets the value of the position velocity feedforward to velocity command gain for the linear position controller. This is used to reduce the position following error at constant speed. **NOTE:** Value of 1000 is the nominal design for zero position following error.	0.001 -2000 500 2000 Decimal	s32 RW per.	Modbus $96C_h$ EtherCAT 4836_h

Parameter name	Description	Unit Minimum value Factory setting Maximum value HMI Format	Data type R/W Persistent	Parameter address via fieldbus
P8-55 KPAFVRV	Position Acceleration Feedforward This parameter sets the value of the position acceleration feedforward to velocity command gain for the linear position controller. This is used to reduce the position following error at constant acceleration. NOTE: Value of 1000 is the nominal design for zero position following error.	0.001 -20000 0 20000 Decimal	s32 RW per.	Modbus $96E_h$ EtherCAT 4837_h
P8-56 KPAFRC	Position Acceleration Feedforward to Current Loop This parameter sets the value of the position acceleration feedforward to current command gain for the linear position controller. This is used to reduce the position following error at constant acceleration. NOTE: Value of 100 is the nominal design for zero position following error. P1-37 value must be correctly set.	0.001 -20000 0 20000 Decimal	s32 RW per.	Modbus 970_h EtherCAT 4838_h
P8-57 KVP	Velocity Proportional Gain This parameter sets the value of the proportional gain for the linear velocity controller.	0.001 0 300 1000000000 Decimal	u32 RW per.	Modbus 972_h EtherCAT 4839_h
P8-58 KVI	Velocity Integral Gain This parameter sets the value of the integral gain for the linear velocity controller.	0.001 0 30000 200000000 Decimal	u32 RW per.	Modbus 974_h EtherCAT $483A_h$
P8-59 KVFR	Velocity Feedforward Ratio This parameter sets the value of the feedforward ratio for the linear velocity controller. NOTE: Value of 1000 makes the control close to a PI control. Higher values reduces the following error but introduces an overshoot.	0.001 0 900 1000 Decimal	u16 RW per.	Modbus 976_h EtherCAT $483B_h$
P8-60 FILTMODE	Velocity Loop Output Filter Mode This parameter sets the value of the velocity loop output filter for the linear velocity controller. Value 0: No filtering. Value 1: First order low pass filter; sets P8-61 as corner frequency. Value 2: Double first order low pass filter (sets P8-61 and P8-62 as corner frequencies as corner frequencies as corner). Value 3: Notch filter (sets P8-62 as notch center frequency and P8-61 as notch frequency width).	- 0 2 3 Decimal	u16 RW per.	Modbus 978_h EtherCAT $483C_h$
P8-61 FILTHZ1	Velocity Loop Output Filter Parameter 1 The function of this parameter depends on the velocity loop output filter mode (see P8-60).	- 1 500 10000 Decimal	u16 RW per.	Modbus $97A_h$ EtherCAT $483D_h$

Parameter name	Description	Unit Minimum value Factory setting Maximum value HMI Format	Data type R/W Persistent	Parameter address via fieldbus
P8-62 FILTHZ2	Velocity Loop Output Filter Parameter 2 The function of this parameter depends on the velocity loop output filter mode (see P8-60).	- 1 500 10000 Decimal	u16 RW per.	Modbus $97C_h$ EtherCAT $483E_h$
P8-63 VELFILTMODE	Velocity Filter Mode This parameter sets the value of the type of filter that is used for extraction of a velocity signal from the position feedback. Value 0: No filtering. Use derivative of feedback position. Value 1: First order low pass filter; sets P8-64 as corner frequency. Value 2: Use of the velocity feedback provided by the encoder. Setting can only be modified if power stage is disabled.	- 0 1 2 Decimal	u32 RW per.	Modbus $97E_h$ EtherCAT $483F_h$
P8-64 VELFILTFRQ	Velocity Filter Pole Frequency This parameter sets the value of the first order filter, which is applied to the velocity feedback signal before applying the velocity controller. **NOTE:** This parameter value is used only if P8-63 is set to 1. Setting can only be modified if power stage is disabled.	- 20 440 2000 Decimal	u16 RW per.	Modbus 980_h EtherCAT 4840_h
P8-65 IFFLPFHZ	Current Feedforward Low Pass Filter This parameter sets the value of the first order filter of the linear controller which is applied to the current feedforward before it is added to current command.	- 10 1000 1000 Decimal	u16 RW per.	Modbus 982_h EtherCAT 4841_h
P8-66 NLTFDESIGNMODE	LTN Torque Filter Mode This parameter sets the value of the torque filter mode used in the LTN control loop. Value 0: Manual set of P8-15 and P8-14 values. Value 1: P8-15 and P8-14 values are computed based on P8-67 value.	- 0 0 1 Decimal	u16 RW per.	Modbus 984_h EtherCAT 4842_h
P8-67 NLTFBW	LTN Torque Filter Bandwidth This parameter sets the value of the filter bandwidth used in LTN control loop to define P8-15 and P8-14 values with 10% overshoot.	Hz 50 1000 2000 Decimal	u16 RW per.	Modbus 986_h EtherCAT 4843_h
P8-68 NLTFBW	Current Filter - Notch Filter Mode This parameter sets the value of the notch filter mode used in the LTN control loop. Value 0: Original notch filter. Value 1: Advanced notch filter.	- 0 0 1 Decimal	u16 RW per.	Modbus 988_h EtherCAT 4844_h
P8-99 LTNUSERVCMDGAIN	Adaptive Velocity Reference Value Gain	0.001 0 1000 3000 Decimal	u32 RW per.	Modbus $9C6_h$ EtherCAT 4863_h

P9 - DTM Data

P9 - DTM Data

Parameter name	Description	Unit Minimum value Factory setting Maximum value HMI Format	Data type R/W Persistent	Parameter address via fieldbus
P9-00 PRGNR	Lexium program number Reads the program number	- 0_h 0_h $FFFFFFFF_h$ Hexadecimal	u32 RO -	Modbus $A00_h$ EtherCAT 4900_h
P9-01 DATE	Firmware Version Date This parameter contains the date of the firmware version.	- 0_h 0_h $FFFFFFFF_h$ Hexadecimal	u32 RO -	Modbus $A02_h$ EtherCAT 4901_h
P9-02 MTP_ID	MTP Identification Code	- 0_h - $FFFFFFFF_h$ Hexadecimal	u16 RO -	Modbus $A04_h$ EtherCAT 4902_h
P9-06 UNAME1	User-Defined Application Name 1 This parameter is provided for a user-defined application name.	- 0_h 0_h $FFFFFFFF_h$ Hexadecimal	u32 RW per.	Modbus $A0C_h$ EtherCAT 4906_h
P9-07 UNAME2	User-Defined Application Name 2 This parameter is provided for a user-defined application name.	- 0_h 0_h $FFFFFFFF_h$ Hexadecimal	u32 RW per.	Modbus $A0E_h$ EtherCAT 4907_h
P9-08 UNAME3	User-Defined Application Name 3 This parameter is provided for a user-defined application name.	- 0_h 0_h $FFFFFFFF_h$ Hexadecimal	u32 RW per.	Modbus $A10_h$ EtherCAT 4908_h
P9-09 UNAME4	User-Defined Application Name 4 This parameter is provided for a user-defined application name.	- 0_h 0_h $FFFFFFFF_h$ Hexadecimal	u32 RW per.	Modbus $A12_h$ EtherCAT 4909_h
P9-10 MBWORD	Modbus Word Order This parameter sets the word order for Modbus. Value 0: Order of the bytes: 0 1 2 3 Value 1: Order of the bytes: 2 3 0 1	- 0 0 1 Decimal	u16 RW per.	Modbus $A14_h$ EtherCAT $490A_h$
P9-11 SERNUM1	Serial Number Part 1	- 0_h 0_h $FFFFFFFF_h$ Hexadecimal	u32 RO -	Modbus $A16_h$ EtherCAT $490B_h$
P9-12 SERNUM2	Serial Number Part 2	- 0_h 0_h $FFFFFFFF_h$ Hexadecimal	u32 RO -	Modbus $A18_h$ EtherCAT $490C_h$

Parameter name	Description	Unit Minimum value Factory setting Maximum value HMI Format	Data type R/W Persistent	Parameter address via fieldbus
P9-13 SERNUM3	Serial Number Part 3	- 0_h 0_h $FFFFFFFF_h$ Hexadecimal	u32 RO -	Modbus $A1A_h$ EtherCAT $490D_h$
P9-14 SERNUM4	Serial Number Part 4	- 0_h 0_h $FFFFFFFF_h$ Hexadecimal	u32 RO -	Modbus $A1C_h$ EtherCAT $490E_h$
P9-15 LTN	Autotuning Method	- 0 0 6 Decimal	u16 RW -	Modbus $A1E_h$ EtherCAT $490F_h$
P9-16 LTNREFERENCE	Autotuning Motion Profile - Type	- 0 0 2 Decimal	u16 RW -	Modbus $A20_h$ EtherCAT 4910_h
P9-17 LTNAVMODE	Anti-vibration tuning mode.	- 0 0 6 Decimal	u16 RW -	Modbus $A22_h$ EtherCAT 4911_h
P9-18 LTNSAVEMODE	Autotuning Results - Save/Discard	- 0 0 3 Decimal	u16 RW -	Modbus $A24_h$ EtherCAT 4912_h
P9-19 LTNNLPEAFF	Autotuning - Elasticity Compensation Filters	- 0 1 1 Decimal	s16 RW -	Modbus $A26_h$ EtherCAT 4913_h
P9-20 LTNCYCLE	Autotuning - Direction of Movement This parameter sets the direction of movement for autotuning. Value 0: Both directions of movement Value 2: One direction of movement	- 0 0 3 Decimal	s16 RW -	Modbus $A28_h$ EtherCAT 4914_h
P9-21 LTNDWELLTIME	Minimum Dwell Time for Detection of Movement Cycle	- 100 200 1000 Decimal	u16 RW -	Modbus $A2A_h$ EtherCAT 4915_h
P9-22 LTNLMJR	Autotuning - Automatic Estimation of Ratio of Load Inertia and Motor Inertia	- 0 0 1 Decimal	u16 RW -	Modbus $A2C_h$ EtherCAT 4916_h
P9-23 LTNSTIFF	Defines which values will be used for the position command filters. Value 0: Automatic smoothing via S-curve optimization of the value Value 1: Manual smoothing	- 0 0 1 Decimal	u16 RW -	Modbus $A2E_h$ EtherCAT 4917_h
P9-25 LTNREFEN	Autotuning Motion Profile - Activation	- 0 0 1 Decimal	u16 RW -	Modbus $A32_h$ EtherCAT 4919_h

Parameter name	Description	Unit Minimum value Factory setting Maximum value HMI Format	Data type R/W Persistent	Parameter address via fieldbus
P9-26 PTPOS	Autotuning - Movement Range in Direction 1 This parameter specifies the movement range for autotuning in direction of movement 1. The sign of the value determines the direction of movement: Positive value: Positive direction of movement as set via parameter P1-01 Negative value: Negative direction of movement as set via parameter P1-01 See parameter P9-20 to select one direction of movement or both directions of movement for Comfort Tuning.	PUU -2147483647 0 2147483647 Decimal	s32 RW -	Modbus $A34_h$ EtherCAT $491A_h$
P9-27 PTNEG	Autotuning - Movement Range in Direction 2 This parameter specifies the movement range for autotuning in direction of movement 2. The sign of the value determines the direction of movement: Positive value: Positive direction of movement as set via parameter P1-01 Negative value: Negative direction of movement as set via parameter P1-01 See parameter P9-20 for Comfort Tuning in a single or in both directions of movement. See parameter P9-20 to select one direction of movement or both directions of movement for Comfort Tuning.	PUU -2147483647 0 2147483647 Decimal	s32 RW -	Modbus $A36_h$ EtherCAT $491B_h$
P9-28 LTNACTIVE	Autotuning Active This parameter indicates whether autotuning is active. Value 0: Autotuning inactive Value 1: Autotuning active	- 0 - 1 Decimal	s16 RO -	Modbus $A38_h$ EtherCAT $491C_h$
P9-29 LTNVCRUISE	Autotuning - Velocity Bits 0 ... 15: Velocity for positive direction of movement Bits 16 ... 31: Velocity for negative direction of movement	0.1rpm|0.1rpm - - - Decimal	u32 RW -	Modbus $A3A_h$ EtherCAT $491D_h$

Parameter name	Description	Unit Minimum value Factory setting Maximum value HMI Format	Data type R/W Persistent	Parameter address via fieldbus
P9-30 LTNST	Autotuning - Status Value 0: Inactive Value 1: Active Value 2: Successfully completed Values 3 … 9: Reserved Value 10: Impossible to set P9-15 Value 11: Impossible to set P9-16 Value 12: Impossible to set P9-17 Value 13: Impossible to set P9-18 Value 14: Impossible to set P9-19 Value 15: Impossible to set P9-21 Value 16: Impossible to set P9-22 Value 17: Impossible to set P9-23 Value 18: Impossible to set P9-24 Value 19: Impossible to set P9-25 Value 20: Impossible to set P9-32 Value 21: Impossible to enable the power stage Value 22: Hold is active Value 23: Undetermined motor Values 24 … 26: Reserved Value 27: Impossible to activate autotuning Value 28: Autotuning did not run successfully Value 29: Reserved Value 30: Low Effort Value 31: AVG Zero Init Value Value 32: Cost factor error detected Value 33: Pos tune user gain modified Value 34: Motor Was Not Recognized Value 35: LTNP Step Updated Value 36: Movement too small Value 37: ICMD Sat.	- 0 - 65535 Decimal	u32 RO -	Modbus $A3C_h$ EtherCAT $491E_h$
P9-30 Continued	Value 38: Insufficient load estimation time. Value 39: Insufficient acceleration/deceleration (less than 33 % of nominal acc/dec) Value 40: Excessive acceleration/deceleration (more than 90 % of nominal acc/dec) Value 41: Need gravity compensation (see P9-35) Value 42: Insufficient velocity (less than 10 % of nominal velocity) Value 43: Insufficient deceleration (less than deceleration ramp DECSTOP) Value 44: Autotuning timeout Value 45: Invalid default values Values 46 … 49: Reserved Value 50: P9-15 set to 0 Value 51: Power stage disabled during autotuning Value 52: Current saturation Value 53: Reserved Value 54: Insufficient excitation for autotuning (poor motion profile: short distance, low acceleration/deceleration, etc.) Value 55: Insufficient tuning effort Value 56: Halt during autotuning Value 57: Undetermined motor Value 58: Motion profile exceeds limits Value 59: Invalid gains during autotuning Value 60: Insufficient movement Values 61 … 69: Reserved			

Parameter name	Description	Unit Minimum value Factory setting Maximum value HMI Format	Data type R/W Persistent	Parameter address via fieldbus
P9-31 PTACCDEC	Autotuning - Acceleration and Deceleration Bits 0 ... 15: Acceleration for Autotuning Bits 16 ... 31: Deceleration for Autotuning	ms|ms 6| 6 6000| 6000 65500| 65500 Decimal	u32 RW -	Modbus $A3E_h$ EtherCAT $491F_h$
P9-32 LTNADVMODE	Autotune advance mode.	- 0 1 2 Decimal	u16 RW -	Modbus $A40_h$ EtherCAT 4920_h
P9-33 LTNEFFORTMAX	Maximum Autotuning Optimization Value Setting can only be modified if power stage is disabled.	0.001 0 - 1000 Decimal	u32 RO -	Modbus $A42_h$ EtherCAT 4921_h
P9-34 LTNBAR	Autotuning Progress Bar	- 0 0 100 Decimal	u16 RO -	Modbus $A44_h$ EtherCAT 4922_h
P9-35 LTNIGRAV	Autotuning - Gravity Estimation	- 0 0 1 Decimal	u16 RW -	Modbus $A46_h$ EtherCAT 4923_h
P9-36 LTNNLAFRC	Set LTNAFRC in Autotune	- 0 0 2 Decimal	s16 RW -	Modbus $A48_h$ EtherCAT 4924_h
P9-37 LTNWARNING	Autotuning - Last Stored Event	- 0 0 65535 Decimal	u32 RO -	Modbus $A4A_h$ EtherCAT 4925_h
P9-38 LTNIMPROVEMENT	Mode 2 AT improvement	- 0 0 100 Decimal	u16 RO -	Modbus $A4C_h$ EtherCAT 4926_h
P9-39 LTNCYCLEIDENT	Cycle Identification status	- 0 0 9 Decimal	u16 RO -	Modbus $A4E_h$ EtherCAT 4927_h
P9-40 LTNDEFAULTS	LTN Autotuning Using Defaults	- 0 0 1 Decimal	u16 RW -	Modbus $A50_h$ EtherCAT 4928_h

Part VII
Operation

What Is in This Part?

This part contains the following chapters:

Chapter	Chapter Name	Page
17	Operation	265
18	Operating Modes	279

Chapter 17
Operation

What Is in This Chapter?

This chapter contains the following topics:

Topic	Page
Access Channels	266
Operating States	267
Setting the Digital Signal Inputs	268
Setting the Digital Signal Outputs	270
Functions for Target Value Processing	273
Setting a Signal Output Via Parameter	274
Forcing the Digital Signal Inputs and Signal Outputs	275
Position Capture via DS402 Profile	277

Access Channels

The product can be accessed via different types of access channels. Simultaneous access via multiple access channels or the use of exclusive access may cause unintended equipment operation.

⚠ WARNING

UNINTENDED EQUIPMENT OPERATION

- Verify that simultaneous access via multiple access channels cannot cause unintended triggering or blocking of commands.
- Verify that the use of exclusive access cannot cause unintended triggering or blocking of commands.
- Verify that the required access channels are available.

Failure to follow these instructions can result in death, serious injury, or equipment damage.

The product can be addressed via different access channels.

Access channels are:
- Integrated HMI
- Digital input signals
- Fieldbus
- Commissioning software LXM28 DTM Library

The product allows you to work with exclusive access which limits access to the product via a single access channel.

Only one access channel can have exclusive access to the product.

Exclusive access can be provided via different access channels:
- Via the integrated HMI:
  The operating mode Jog or Autotuning can be started via the HMI.
- Via a fieldbus:
  Exclusive access is provided to a fieldbus by blocking the other access channels with the parameter `AccessLock`.
- Via the commissioning software LXM28 DTM Library:
  The commissioning software receives exclusive access via the switch *Exclusive access* in position *On*.

When the product is powered on, there is no exclusive access via an access channel.

The signal inputs of the safety function STO and the signal input functions **SON** (falling edge), **CWL(NL)** and **CCWL(PL)** are always effective during exclusive access.

Operating States

State Diagram

When the product is powered on and when an operating mode is started *(see page 279)*, the product goes through a number of operating states.

The state diagram (state machine) shows the relationships between the operating states and the state transitions.

The operating states are internally monitored and influenced by monitoring functions.

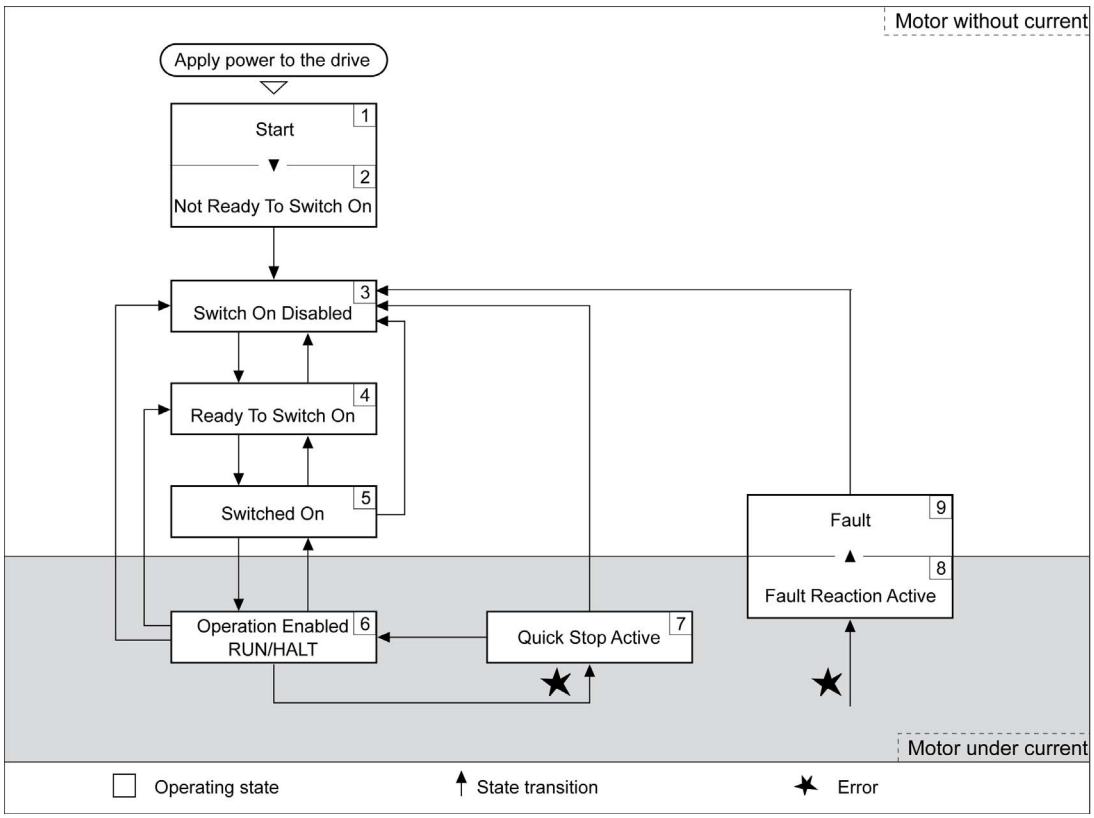

Operating States

Operating state	Description
1 Start	Electronics are initialized
2 Not Ready To Switch On	The power stage is not ready to switch on
3 Switch On Disabled	Impossible to enable the power stage
4 Ready To Switch On	The power stage is ready to switch on.
5 Switched On	Power stage is switched on
6 Operation Enabled	Power stage is enabled Selected operating mode is active
7 Quick Stop Active	Quick Stop is being executed
8 Fault Reaction Active	Error response is active
9 Fault	Error response terminated Power stage is disabled

Resetting an Error Message

After you have removed the cause of the error, you can reset the error message in one of the following ways:

- With a rising edge of the signal input function **SON**
- By setting parameter P0-01 to the value 0
- By using the **Fault Reset** button in the SoMove commissioning software.

Setting the Digital Signal Inputs

Various signal functions can be assigned to the digital signal inputs.

The functions of the inputs and outputs depend on the selected operating mode and the settings of the corresponding parameters.

⚠ WARNING

UNINTENDED EQUIPMENT OPERATION

- Only start the system if there are no persons or obstructions in the zone of operation.
- Verify that the wiring is appropriate for the settings.
- Carefully run tests for all operating states and potential error situations when commissioning, upgrading or otherwise modifying the operation of the drive.

Failure to follow these instructions can result in death, serious injury, or equipment damage.

Default Presets of the Signal Inputs

The following table shows the default presets of the digital signal inputs:

Setting A for `P2-10` ... `P2-17`	Short name	Name	Digital inputs preset
03_h	GAINUP	Increase Gain	-
$1C_h$	TPROB1	Touch Probe 1	-
$1D_h$	TPROB2	Touch Probe 2	-
21_h	OPST	Stop and Disable Power Stage	DI8
22_h	CWL(NL)	Negative Limit Switch (NL/LIMN)	DI6
23_h	CCWL(PL)	Positive Limit Switch (PL/LIMP)	DI7
24_h	ORGP	Reference Switch	DI5

Parameterization of the Signal Input Functions

The signal input functions for the inputs DI1 ... DI8 are configured via parameters P2-10 ... P2-17.

A signal input function can only be assigned to one of the signal inputs.

The following table provides an overview of the possible signal input functions:

Setting A for P2-10 ... P2-17	Short name	Name	Description
03_h	GAINUP	Increase Gain	The signal input function GAINUP increases the control gain according to the values and conditions set via parameter P2-27.
$1C_h$	TPROB1	Touch Probe 1	The signal input function TPROB1 is used to trigger the Position Capture function. This input function can only be assigned to the digital input DI7. Refer to parameters P5-37...P5-39 for additional information.
$1D_h$	TPROB2	Touch Probe 2	The signal input function TPROB2 is used to trigger the Position Capture function. This input function can only be assigned to the digital input DI6. Refer to parameters P5-57...P5-59 for additional information.
21_h	OPST	Stop and Disable Power Stage	The signal input function OPST stops the motor with the deceleration ramp set via the parameter P1-68 and then disables the power stage.
22_h	CWL(NL)	Negative Limit Switch (NL/LIMN)	Negative limit switch (NL/LIMN). When the signal input is activated, an alert is triggered. The deceleration ramp is specified via parameter P5-25.
23_h	CCWL(PL)	Positive Limit Switch (PL/LIMP)	Positive limit switch (PL/LIMP). When the signal input is activated, an alert is triggered. The deceleration ramp is specified via parameter P5-26.
24_h	ORGP	Reference Switch	The signal input function ORGP is used for the reference switch.

Setting the Digital Signal Outputs

Various signal functions can be assigned to the digital signal outputs.

The functions of the inputs and outputs depend on the selected operating mode and the settings of the corresponding parameters.

⚠ WARNING

UNINTENDED EQUIPMENT OPERATION

- Only start the system if there are no persons or obstructions in the zone of operation.
- Verify that the wiring is appropriate for the settings.
- Carefully run tests for all operating states and potential error situations when commissioning, upgrading or otherwise modifying the operation of the drive.

Failure to follow these instructions can result in death, serious injury, or equipment damage.

Default Presets of the Signal Outputs

The following table shows the default presets of the digital signal outputs:

Setting A for P2-18 ... P2-21	Short name	Name	Digital outputs presets
01_h	SRDY	Servo Ready	DO1
02_h	SON	Servo On	-
03_h	ZSPD	Zero Speed	-
04_h	TSPD	Speed Reached	-
05_h	TPOS	Movement Completed	-
06_h	TQL	Torque Limit Reached	-
07_h	ERROR	Error Detected	-
08_h	BRKR	Holding Brake Control	-
09_h	HOMED_OK	Homing Completed	-
10_h	OLW	Motor Overload Alert	-
11_h	WARN	Alert Signal activated	-
12_h	OVF	Position command overflow	-
13_h	SCWL(SNL)	Negative Software Limit Switch Reached	-
14_h	SCCWL(SPL)	Positive Software Limit Switch Reached	-
15_h	CMD_OK	Data set completed	-
16_h	CAP_1_OK	Capture 1 completed	-
17_h	-	-	-
18_h	CAP_2_OK	Capture 2 completed	-
19_h	SP_OK	Speed reached output	-
$1A_h$ … $2F_h$	-	-	-
30_h	SDO_0	Output the status of bit 0 of P4-06.	-
31_h	SDO_1	Output the status of bit 1 of P4-06.	-
32_h	SDO_2	Output the status of bit 2 of P4-06.	-
33_h	SDO_3	Output the status of bit 3 of P4-06.	-
34_h … $3F_h$	-	-	-

Parameterization of the Signal Output Functions

The signal output functions for the outputs DO1 ... DO4 are configured via parameters P2-18 ... P2-21.

The following table provides an overview of the possible signal output functions:

Setting A for P2-18 ... P2-21	Short name	Name	Description
01_h	SRDY	Servo Ready	The signal output function SRDY indicates that no errors are present, that is, the drive is not in the operating state Fault.
02_h	SON	Servo On	The signal output function SON indicates that the drive is in the operating state Operation Enabled .
03_h	ZSPD	Zero Speed	The signal output function ZSPD indicates that the velocity of the motor is less than the velocity value set via parameter P1-38 .
04_h	TSPD	Speed Reached	The signal output function TSPD indicates that the velocity of the motor is greater than the velocity value set via parameter P1-39 .
05_h	TPOS	Movement Completed	The signal output function TPOS indicates that the position deviation at the target position is within the tolerance set via the parameter P1-54.
06_h	TQL	Torque Limit Reached	The signal output function TQL indicates that the torque of the motor has reached the value set via parameters P1-12...P1-14.
07_h	ERROR	Error Detected	The signal output function ERROR indicates that an error has been detected and that the drive has switched to the operating state Fault.
08_h	BRKR	Holding Brake Control	The signal output function BRKR is used to control the holding brake with the settings made via parameters P1-42 and P1-19. The holding brake must be connected to the output to which the signal output function BRKR is assigned.
09_h	HOMED_OK	Homing Completed	The signal output function HOMED_OK indicates that the homing procedure has been successfully completed. The settings for Homing are specified via parameters P5-04...P5-06.
10_h	OLW	Motor Overload Alert	The signal output function OLW indicates a motor overload condition. A threshold for the signal output function OLW can be set via parameter P1-28.
11_h	WARN	Alert Signal activated	The signal output function indicates that one of the following conditions has been detected: Hardware limit switch triggered, undervoltage, Nodeguard alert, Operational Stop (OPST).
12_h	-	-	Reserved
13_h	SCWL(SNL)	Negative Software Limit Switch Reached	The signal output function SCWL(SNL) indicates that the negative software limit switch set via parameter P5-09 has been reached. When the software limit switch is reached, an alert is triggered. The deceleration ramp is specified via parameter P5-23.
14_h	SCCWL(SPL)	Positive Software Limit Switch Reached	The signal output function SCCWL(SPL) indicates that the positive software limit switch set via parameter P5-08 has been reached. When the software limit switch is reached, an alert is triggered. The deceleration ramp is specified via parameter P5-24.
15_h	CMD_OK	Data set completed	The signal output function CMD_OK indicates that the data set including the waiting time has been successfully completed.
16_h	CAP_1_OK	Capture 1 completed	The signal output function CAP_1_OK indicates that a position capture (Touch Probe 1) has been successfully completed. The settings for position capture (Touch Probe 1) are specified via parameters P5-37 ... P5-39.
17_h	-	-	Reserved
18_h	CAP_2_OK	Capture 2 completed	The signal output function CAP_2_OK indicates that a position capture (Touch Probe 2) has been successfully completed. The settings for position capture (Touch Probe 2) are specified via parameters P5-57 ... P5-59.
19_h	SP_OK	Speed reached output	The signal output function SP_OK indicates that the target velocity has been reached.
$1A_h$...$2F_h$	-	-	Reserved

Setting A for P2-18 ... P2-21	Short name	Name	Description
30_h	SDO_0	Output the status of bit 0 of P4-06.	The signal output functions SDO_0 ... SDO_3 provide the bit pattern (bits 0 … 3) required to determine the setting of the parameter P4-06.
31_h	SDO_1	Output the status of bit 1 of P4-06.	The signal output functions SDO_0 ... SDO_3 provide the bit pattern (bits 0 … 3) required to determine the setting of the parameter P4-06.
32_h	SDO_2	Output the status of bit 2 of P4-06.	The signal output functions SDO_0 ... SDO_3 provide the bit pattern (bits 0 … 3) required to determine the setting of the parameter P4-06.
33_h	SDO_3	Output the status of bit 3 of P4-06.	The signal output functions SDO_0 ... SDO_3 provide the bit pattern (bits 0 … 3) required to determine the setting of the parameter P4-06.
34_h ... $3F_h$	-	-	Reserved

Functions for Target Value Processing

Stopping a Movement with OPST

With the signal input function OPST (Operational Stop), the ongoing movement is stopped.

In order to stop a movement via a signal input, you must first parameterize the signal input function OPST, refer to Setting the Digital Signal Inputs *(see page 268)*.

The movement is interrupted via a deceleration ramp to the point of the defined standstill. After that, the power stage is disabled once the drive has determined that the motor is at standstill, and if so configured, the holding brake is applied.

⚠ WARNING

UNINTENDED EQUIPMENT OPERATION

- During commissioning, trigger all signals and simulate all conditions that cause a power stage disable request in order to verify that all loads come to a secure standstill when the power stage is disabled under maximum load conditions.
- Install a dedicated service brake if removal of power to the motor does not meet the requirements of your application.

Failure to follow these instructions can result in death, serious injury, or equipment damage.

An error, AL013, is detected and presented.

The deceleration ramp is specified via parameter `P1-68`.

After the OPST function is enabled, you must disable it and re-enable the power stage for continued operation.

Setting a Signal Output Via Parameter

The digital signal outputs can be set via a parameter.

In order to set a digital signal output via the parameter, you must first parameterize the signal output functions SDO_0 … SDO_3, refer to Setting the Digital Signal Outputs *(see page 270)*.

The parameter `P4-06` lets you set the digital signal outputs.

Parameter name	Description	Unit Minimum value Factory setting Maximum value HMI Format	Data type R/W Persistent	Parameter address via fieldbus
`P4-06` FOT	Setting a signal output via parameter This parameter lets you set those signal outputs whose signal output functions have been defined by SDO_0 … SDO_3. Bit 0 = 1 sets those signal outputs whose signal output function has been set to SDO_0. Bit 1 = 1 sets those signal outputs whose signal output function has been set to SDO_1. Bit 2 = 1 sets those signal outputs whose signal output function has been set to SDO_2. Bit 3 = 1 sets those signal outputs whose signal output function has been set to SDO_3. See P2-18 ... P2-21 for assigning the functions to the digital outputs.	- 0_h 0_h FF_h Hexadecimal	u16 RW -	Modbus $50C_h$ EtherCAT 4406_h

Forcing the Digital Signal Inputs and Signal Outputs

Forcing of signals means that the digital inputs and outputs are set manually. Forcing input and output values can have serious consequences on the operation of a machine or process.

⚠ WARNING

UNINTENDED EQUIPMENT OPERATION CAUSED BY FORCING

- Only force I/O if there are no persons or obstructions in the zone of operation.
- Only force I/O if you are fully familiar with the effects of the signals.
- Only force I/O for test purposes, maintenance or other short-term tasks.
- Do not use forcing for regular, long-term or in-service operation.
- Always remove forcing when the task (testing, maintenance or other short-term operation) is completed.

Failure to follow these instructions can result in death, serious injury, or equipment damage.

Forcing the Digital Inputs

Forcing of the digital inputs is set via the parameters P3-06 and P4-07.

The parameter P3-06 lets you specify which digital signal inputs are allowed to be forced.

Parameter name	Description	Unit Minimum value Factory setting Maximum value HMI Format	Data type R/W Persistent	Parameter address via fieldbus
P3-06 SDI	Digital Inputs - Forcing Settings This parameter determines whether a digital input can be forced. Bits 0 … 7: Digital input DI1 … Digital input DI8 Bit settings: Value 0: Digital input cannot be forced Value 1: Digital input can be forced To start forcing, you must write P4-07. See P2-10 … P2-17 for the assignment of signal input functions to the digital inputs.	- 0_h 0_h $7FF_h$ Hexadecimal	u16 RW -	Modbus $40C_h$ EtherCAT 4306_h

Use parameter P4-07 to activate forcing of the digital signal inputs.

Parameter name	Description	Unit Minimum value Factory setting Maximum value HMI Format	Data type R/W Persistent	Parameter address via fieldbus
P4-07 ITST	State of Digital Inputs / Activate Forcing A read access to this parameter indicates the state of the digital inputs in the form of a bit pattern. Example: Read value 0x0011: Digital input 1 is activated By writing this parameter, you can change the state of the inputs provided that the setting for the corresponding input in P3-06 allows for forcing (value 1 for the bit corresponding to the input). Example: Write value 0x0011: Digital input 1 is activated Read value 0x0011: Digital input 1 is activated See P3-06 for permitting forcing of individual digital inputs. See P2-10 … P2-17 for the assignment of signal input functions to the digital inputs.	- 0_h 0_h FF_h Hexadecimal	u16 RW -	Modbus $50E_h$ EtherCAT 4407_h

Forcing the Digital Outputs

Forcing of the digital outputs is set via the parameters P4-27 and P4-28.

The parameter P4-27 lets you specify which digital signal outputs are allowed to be forced.

Parameter name	Description	Unit Minimum value Factory setting Maximum value HMI Format	Data type R/W Persistent	Parameter address via fieldbus
P4-27 DO_FORCE_MASK	Digital Outputs - Forcing Settings This parameter determines whether a digital output can be forced. Bits 0 … 3: Digital output DO1 … Digital output DO4 Bit settings: Value 0: Digital output cannot be forced Value 1: Digital output can be forced To start forcing, you must write P4-28. See P2-18 … P2-21 for the assignment of signal output functions to the digital outputs.	- 0_h 0_h $1F_h$ Hexadecimal	u16 RW -	Modbus 536_h EtherCAT $441B_h$

Use parameter P4-28 to activate forcing of the digital signal outputs.

Parameter name	Description	Unit Minimum value Factory setting Maximum value HMI Format	Data type R/W Persistent	Parameter address via fieldbus
P4-28 DO_FORCE_VALUE	State of Digital Outputs / Activate Forcing A read access to this parameter indicates the state of the digital outputs in the form of a bit pattern. Example: Read value 0x0011: Digital output 1 is activated By writing this parameter, you can change the state of the outputs provided that the setting for the corresponding output in P4-27 allows for forcing (value 1 for the bit corresponding to the output). Example: Write value 0x0011: Digital output 1 is activated Read value 0x0011: Digital output 1 is activated See P4-27 for permitting forcing of individual digital outputs. See P2-18 … P2-21 for the assignment of signal output functions to the digital outputs.	- 0_h 0_h $1F_h$ Hexadecimal	u16 RW -	Modbus 538_h EtherCAT $441C_h$

Position Capture via DS402 Profile

Description

The motor position can be captured when a signal is detected at a Touch Probe Input.

Adjusting and Starting Position Capture

`Touch Probe Function` $60B8_h$ object is used to adjust and start position capture.

Index	Name	Object type Data type Access	PDO mapping object	Minimum value Factory settings Maximum value
$60B8_h$	Touch Probe Function	VAR UINT16 rww	Yes	0 - 65535

Bit	Meaning
Bit 0	0: Deactivate Touch Probe Input 1 1: Activate Touch Probe Input 1
Bit 1	0: One time capture 1: Continuous capture
Bit 2	0: Trigger Touch Probe Input 1 1: Trigger with zero pulse signal or position encoder
Bit 3	Reserved
Bit 4	0: Disabling capture with rising edge 1: Enabling capture with rising edge
Bit 5	0: Disabling capture with falling edge 1: Enabling capture with falling edge
Bit 6 … 7	Reserved
Bit 8	0: Deactivate Touch Probe Input 2 1: Activate Touch Probe Input 2
Bit 9	0: One time capture 1: Continuous capture
Bit 10	0: Trigger Touch Probe Input 2 1: Trigger with zero pulse signal or position encoder
Bit 11	Reserved
Bit 12	0: Disabling capture with rising edge 1: Enabling capture with rising edge
Bit 13	0: Disabling capture with falling edge 1: Enabling capture with falling edge
Bit 14 … 15	Reserved

Indicating the Position Capture Status

`Touch Probe Status` $60B9_h$ object is used to indicate the position capture status.

Index	Name	Object type Data type Access	PDO mapping object	Minimum value Factory settings Maximum value
$60B9_h$	Touch Probe Status	VAR UINT16 ro	Yes	0 0 65535

Bit	Meaning
Bit 0	0: Touch Probe Input 1 deactivated 1: Touch Probe Input 1 activated
Bit 1	0: Touch Probe Input 1: no value captured for rising edge 1: Touch Probe Input 1: value captured for rising edge
Bit 2	0: Touch Probe Input 1: no value captured for falling edge 1: Touch Probe Input 1: value captured for falling edge
Bit 3 … 7	Reserved
Bit 8	0: Touch Probe Input 2 deactivated 1: Touch Probe Input 2 activated
Bit 9	0: Touch Probe Input 2: no value captured for rising edge 1: Touch Probe Input 2: value captured for rising edge
Bit 10	0: Touch Probe Input 2: no value captured for falling edge 1: Touch Probe Input 2: value captured for falling edge
Bit 11 … 15	Reserved

Chapter 18
Operating Modes

What Is in This Chapter?

This chapter contains the following sections:

Section	Topic	Page
18.1	Setting the Operating Mode	280
18.2	Operating Mode Cyclic Synchronous Torque	287
18.3	Operating Mode Cyclic Synchronous Velocity	288
18.4	Operating Mode Cyclic Synchronous Position	289
18.5	Operating Mode Profile Position	290
18.6	Operating Mode Profile Velocity	294
18.7	Operating Mode Profile Torque	295
18.8	Operating Mode Homing	297
18.9	Operating Mode Interpolated Position	299
18.10	Operating Mode Jog	301

Section 18.1
Setting the Operating Mode

What Is in This Section?

This section contains the following topics:

Topic	Page
Setting the Operating Mode	281
Indication of the Operating State	283
Changing the Operating State	284
Object units	285

Setting the Operating Mode

Unsuitable settings or unsuitable data may trigger unintended movements, trigger signals, damage parts and disable monitoring functions. Some parameters and other operational data do not become active until after a restart.

⚠ WARNING

UNINTENDED EQUIPMENT OPERATION

- Only start the system if there are no persons or obstructions in the zone of operation.
- Do not operate the drive system with undetermined parameter values.
- Never modify a parameter value unless you fully understand the parameter and all effects of the modification.
- Restart the drive and verify the saved operational data and/or parameter values after modification.
- Carefully run tests for all operating states and potential error situations when commissioning, upgrading or otherwise modifying the operation of the drive.
- Verify the functions after replacing the product and also after making modifications to the parameter values and/or other operational data.

Failure to follow these instructions can result in death, serious injury, or equipment damage.

The drive has the following EtherCAT operating modes:

- Jog
- Profile Position
- Profile Velocity
- Profile Torque
- Profile Homing
- Interpolation
- Cyclic Synchronous Position
- Cyclic Synchronous Velocity
- Cyclic Synchronous Torque

The settings for the required operating mode must be made in the EtherCAT controller software.

Changing an Operating Mode

The object `Mode of operation` 6060_h is used to set the desired operating mode:

Index	Name	Object type Data type Access	PDO mapping object	Minimum value Factory setting Maximum value
6060_h	Mode of operation: ● -1/ Jog ● 1/ Profile Position ● 3/ Profile Velocity ● 4/ Profile Torque ● 6/ Profile Homing ● 7/ Interpolation ● 8/ Cyclic synchronous position ● 9/ Cyclic synchronous velocity ● 10/ Cyclic synchronous torque **NOTE:** Modified settings become active immediately.	VAR INT8 rww	Yes	-1 - 10

The object `Mode of operation display` 6061_h is used to read the current operating mode:

Index	Name	Object type Data type Access	PDO mapping object	Minimum value Factory setting Maximum value
6061_h	Mode of operation display: ● -1/ Jog ● 1/ Profile Position ● 3/ Profile Velocity ● 4/ Profile Torque ● 6/ Profile Homing ● 7/ Interpolation ● 8/ Cyclic synchronous position ● 9/ Cyclic synchronous velocity ● 10/ Cyclic synchronous torque	VAR INT8 ro	Yes	-1 - 10

Indication of the Operating State

Status Word Bits Description

The object `Statusword 6041`$_h$ provides information on the operating state of the device and the processing status of the operating mode.

Bit	Name	Meaning
0	Status bit	Provides information on the operating state
1	Status bit	Provides information on the operating state
2	Status bit	Provides information on the operating state
3	Status bit	Provides information on the operating state
4	Voltage Enabled	1: The DC bus voltage is correct. 0: The DC bus voltage is unavailable or insufficient, the device does not transition from operating state 3 to operating state 4.
5	Status bit	Provides information on the operating state
6	Status bit	Provides information on the operating state
7	Alert detected	1: An alert has been detected.
8	Halt	1: A Halt command is active.
9	Remote	1: The device carries out commands via the fieldbus. 0: The device is controlled via a different interface. In such a case, it is still possible to read or write parameters via the fieldbus.
10	Target Reached	Used for monitoring the current operating mode. Details can be found in the chapters on the individual operating modes.
11	Internal Limit Active	The assignment of bit 11 can be set via the parameter `P3-30`.
12	Operating mode-specific	Used for monitoring the current operating mode. Details can be found in the chapters on the individual operating modes.
13	x_err	1: An error which needs to be remedied prior to further processing has been detected.
14	x_end	0: An operating mode is started. 1: Processing is terminated or interrupted, for example by a Halt command. Bit 14 toggles to "1" once the motor has come to a standstill. The signal change of bit 14 to "1" is suppressed if one process is followed immediately by a new process in a different operating mode.
15	ref_ok	1: The motor has a valid zero point, for example as a result of a reference movement. A valid zero point remains valid even if the power stage is disabled.

Status Bits 0, 1, 2, 3, 5, and 6

Bits 0, 1, 2, 3, 5 and 6 of the object `Statusword` 6041$_h$ provide information on the operating state.

Operating state	Bit 6 Switch On Disabled	Bit 5 Quick Stop	Bit 3 Fault	Bit 2 Operation Enabled	Bit 1 Switch On	Bit 0 Ready To Switch On
2 Not Ready To Switch On	0	-	0	0	0	0
3 Switch On Disabled	1	-	0	0	0	0
4 Ready To Switch On	0	1	0	0	0	1
5 Switched On	0	1	0	0	1	1
6 Operation Enabled	0	1	0	1	1	1
7 Quick Stop Active	0	0	0	1	1	1
8 Fault Reaction Active	0	-	1	1	1	1
9 Fault	0	-	1	0	0	0

Changing the Operating State

Control Word Bits Description

The object `Controlword 6040`$_h$ can be used to switch between the operating states.

Bit	Name	Meaning
0	Switch On	Used to switch between operating states
1	Enable Voltage	Used to switch between operating states
2	Quick Stop	Used to switch between operating states
3	Enable Operation	Used to switch between operating states
4	Operating mode specific	Used for the operating mode-specific settings.
5	Operating mode specific	Used for the operating mode-specific settings.
6	Operating mode specific	Used for the operating mode-specific settings.
7	Fault Reset	Used to switch between operating states
8	Halt	1: A HALT command is triggered.
9	Operating mode specific	Used for the operating mode-specific settings.
10 … 15	Reserved	Reserved

Bits 0, 1, 2, 3, and 7

Bits 0, 1, 2, 3, and 7 of the parameter `Controlword` 6040$_h$ allow switching between the operating states.

Command	State transitions	State transition to	Bit 7 Fault reset	Bit 3 Enable Operation Fault	Bit 2 Quick Stop	Bit 1 Enable voltage	Bit 0 Switch On
Shutdown	T2, T6, T8	4 Ready To Switch On	-	-	1	1	0
Switch On	T3	5 Switched On	-	-	1	1	1
Disable voltage	T7, T9, T10, T12	3 Switch On Disabled	-	-	-	0	-
Quick Stop	T7, T10, T11	3 Switch On Disabled 7 Quick Stop Active	-	-	0	1	-
Disable Operation	T5	5 Switched On	-	0	1	1	1
Enable Operation	T4, T16	6 Operation Enabled	-	1	1	1	1
Fault Reset	T15	3 Switch On Disabled	0→1	-	-	-	-

Object units

Overview

Two objects are used to set the gear ratio and the feed constant conversion factors, each of which has two subindex.

These objects have four equivalent variables:

Item	Object		Description
Feed constant	$6092{:}1_h$	Feed Unit conversion numerator	Conversion factors of the user-defined position unit. Used to multiply the motor revolution (rotary motors) or the motor pitch (linear motors), according to the configured motor type.
	$6092{:}2_h$	Shaft revolutions Unit conversion denominator	
Gear ratio	$6091{:}1_h$	Motor revolutions Motor shaft scaling for the fieldbus gear ratio	Conversion factor of the motor shaft revolution.
	$6091{:}2_h$	Shaft revolutions Drive shaft scaling for the fieldbus gear ratio	Conversion factor of the drive shaft revolution.

It is possible to modify the subindex of both objects, but it is usually sufficient to modify only the feed constant value, as shown in the following example:

Resolution = $(6092{:}1_h / 6092{:}2_h) \times (6091{:}1_h / 6091{:}2_h)$

Example by unit dimensions:

Unit dimension	Examples
Position units	Assuming: ● $6092{:}1_h = 360000$ ● $6092{:}2_h = 1$ ● $6091{:}1_h = 1$ ● $6091{:}2_h = 1$ ● The actual position reading = 720000 Then: 720000 / [(360000 / 1) x (1 / 1)] = 2 revolutions
Velocity units	Assuming: ● $6092{:}1_h = 360000$ ● $6092{:}2_h = 1$ ● $6091{:}1_h = 1$ ● $6091{:}2_h = 1$ ● The actual velocity reading = 720000 Then: 720000 / [(360000 / 1) x (1 / 1)] = 2 revolutions per second
Acceleration units	Assuming: ● $6092{:}1_h = 360000$ ● $6092{:}2_h = 1$ ● $6091{:}1_h = 1$ ● $6091{:}2_h = 1$ ● The actual acceleration reading = 720000 Then: 720000 / [(360000 / 1) x (1 / 1)] = 2 revolutions per second^2
Current units	The units are derived from object 6075_h (Motor Rated Current) The value of this object is user-defined, in mA. After setting a value for 6075_h, all other current objects must receive values defined in 1/1000 (one-thousandth) of 6075_h. For example: Assuming 6075_h has a value of 20000 mA, then to set a value of 15000 mA for 6073_h (Maximum Current), write 750 for 6073h. The calculation is: (750 / 1000) × 20000 = 15000 mA

Examples of Rotary Motor with Gear or Rotary to Linear Motion Translation Device

When using a gear or rotary-to-linear motion translation device, set values for the translation ratio of the gear in order to define the unit variables.

Using a ball screw that converts	Object values to set
1 motor revolution to 155 mm	$6092{:}1_h = 1550$ $6092{:}2_h = 1$ $6091{:}1_h = 1$ $6091{:}2_h = 1$

This units will be as follows:

- Position in 0.1 mm
- Velocity in 0.1 mm/sec
- Acceleration in 0.1 $mm.sec^2$

Section 18.2
Operating Mode Cyclic Synchronous Torque

Operating Mode Cyclic Synchronous Torque

Description

In the operating mode Cyclic Synchronous Torque (CST), the drive synchronously follows the torque values transmitted on a cyclic basis. The transmitted values are linearly interpolated within the drive.

The motion profile is generated by the master controller.

The possible applications for this operating mode are described in the manual of the master controller.

The operating mode is selected by writing 10 in the object `Mode of operation` 6060_h.

Starting and Terminating the Operating Mode

A transition to the operating state 6 Operation Enabled starts the set operating mode.

The operating mode is terminated when a different operating mode is selected or when the operating state 6 Operation Enabled is exited.

Source of Reference Value Signals

The object `Target torque` 6071_h provides the target value.

100.0% correspond to the continuous stall torque.

Target values are in increments of 0.1%.

Modified settings become active immediately.

Control Word

In the operating mode, the operating mode-specific bits in the `Controlword` 6040_h have no significance.

Status Word

Information on the current movement is available via bits 10 and 12 … 15 in the `Statusword` 6041_h.

Bit	Name	Meaning
Bit 10	Reserved	Not relevant for this operating mode
Bit 12	-	0: Target torque ignored 1: Target torque shall be used as input to torque control loop
Bit 13	Reserved	Not relevant for this operating mode
Bit 14	x_end	0: Operating mode started 1: Operating mode terminated
Bit 15	ref_ok	1: Drive has valid reference point

Section 18.3
Operating Mode Cyclic Synchronous Velocity

Operating Mode Cyclic Synchronous Velocity

Description

In the operating mode Cyclic Synchronous Velocity (CSV), the drive synchronously follows the velocity values transmitted on a cyclic basis. The transmitted values are linearly interpolated within the drive.

The motion profile is generated by the master controller.

The possible applications for this operating mode are described in the manual of the master controller.

The operating mode is selected by writing 9 in the object `Mode of operation` 6060_h.

Starting and Terminating the Operating Mode

A transition to the operating state 6 Operation Enabled starts the set operating mode.

The operating mode is terminated when a different operating mode is selected or when the operating state 6 Operation Enabled is exited.

Source of Reference Value Signals

The object `Target velocity` $60FF_h$ provides the target value.

The target velocity is limited to the setting in `Max Profile Velocity` $607F_h$.

Modified settings become active immediately.

Control Word

In the operating mode, the operating mode-specific bits in the `Controlword` 6040_h have no significance.

Status Word

Information on the current movement is available via bits 10 and 12 … 15 in the `Statusword` 6041_h.

Bit	Name	Meaning
Bit 10	Reserved	Not relevant for this operating mode
Bit 12	-	0: Target velocity ignored 1: Target velocity shall be used as input to torque control loop
Bit 13	Reserved	Not relevant for this operating mode
Bit 14	x_end	0: Operating mode started 1: Operating mode terminated
Bit 15	ref_ok	1: Drive has valid reference point

Section 18.4
Operating Mode Cyclic Synchronous Position

Operating Mode Cyclic Synchronous Position

Description

In the operating mode Cyclic Synchronous Position (CSP), the drive synchronously follows the position values transmitted on a cyclic basis. The transmitted values are linearly interpolated within the drive.

The motion profile is generated by the master controller.

The possible applications for this operating mode are described in the manual of the master controller.

The operating mode is selected by writing 8 in the object `Mode of operation 6060`$_h$.

Starting and Terminating the Operating Mode

A transition to the operating state 6 Operation Enabled starts the set operating mode.

The operating mode is terminated when a different operating mode is selected or when the operating state 6 Operation Enabled is exited.

Source of Reference Value Signals

The object `Target Position 607A`$_h$ provides the target value.

Target values are in pulses.

The object `Interpolation time period 60C2`$_h$ consist of:

- `Interpolation time units 60C2:01`$_h$ which specifies the interpolation time.
- `Interpolation time index 60C2:02`$_h$ which specifies the time basis. The value of -3 corresponds to a time basis in milliseconds.

NOTE: The interpolation time period must be configured with the same value of cycle ticks as configured in the EtherCAT controller software.

Modified settings become active immediately.

Control Word

In the operating mode, the operating mode-specific bits in the `Controlword 6040`$_h$ have no significance.

Status Word

Information on the current movement is available via bits 10 and 12 … 15 in the `Statusword 6041`$_h$.

Bit	Name	Meaning
Bit 10	Reserved	Not relevant for this operating mode
Bit 12	-	0: Target position ignored 1: Target position used as input to position control loop
Bit 13	Reserved	Not relevant for this operating mode
Bit 14	x_end	0: Operating mode started 1: Operating mode terminated
Bit 15	ref_ok	1: Drive has valid reference point

Section 18.5
Operating Mode Profile Position

What Is in This Section?

This section contains the following topics:

Topic	Page
Operating Mode Profile Position	291
Example of a Movement Via DS402 Objects	293

Operating Mode Profile Position

Description

In the operating mode Profile Position (PP), the drive performs a movement to the transmitted target position.

The motion profile is generated by the drive, taking into account the target values received from the master controller.

Target values include target position, target velocity, acceleration, and deceleration.

The operating mode is selected by writing 1 in the object `Mode of operation 6060`$_h$.

Starting and Terminating the Operating Mode

The bits movement is started via the `Controlword 6040`$_h$.

The operating mode is terminated when the motor is at standstill and if one of the following conditions is met:
- Target position reached
- Stop caused by Halt or Quick Stop
- Stop caused by a detected error
- Switch to another operating mode

Source of Reference Value Signals

The object `Target position 607A`$_h$ provides the target position value.

The target position minimum and maximum values depends on
- Scaling factor
- Software limit switches, if they are activated

The object `Target velocity 6081`$_h$ provides the target velocity value.

The object `Profile acceleration 6083`$_h$ provides the acceleration value.

The object `Profile deceleration 6084`$_h$ provides the deceleration value.

The target velocity is limited to the setting in `Max Profile Velocity 607F`$_h$.

Modified settings become active immediately.

Control Word

In the operating mode, the bits 4 … 6 and the bits 8 … 9 in the `Controlword 6040`$_h$ start a movement.

Following transitions starts a movement to a target position.

Bit 9: Change on setpoint	Bit 5: Change setpoint immediately	Bit 4: New setpoint	Drives behavior
0	0	0 to 1	Target values transmitted during a movement become immediately effective and are executed at the target. The movement is stopped at the current target position.
1	0	0 to 1	Target values transmitted during a movement become immediately effective and are executed at the target. The movement is not stopped at the current target position.
x	0	0 to 1	Target values transmitted during a movement become immediately effective and are immediately executed.

Bit	Name	Meaning
Bit 6	Absolute/relative	0: Absolute movement 1: Relative movement
Bit 8	Halt	0: No Halt command 1: Stop movement with Halt

Status Word

Information on the current movement is available via bits 10 and 12 … 15 in the `Statusword` 6041_h.

Bit	Name	Meaning
Bit 10	Target reached	0: Target position not reached 1: Target position reached
Bit 12	-	0: New position possible 1: New target position accepted
Bit 13	x_err	0: No error detected 1: An error has been detected
Bit 14	x_end	0: Operating mode started 1: Operating mode terminated
Bit 15	ref_ok	1: Drive has valid reference point

Example of a Movement Via DS402 Objects

Adapting the Mapping for RxPDO

Objects to map in RxPDO are listed in the following table

Index:Subindex	Description
$6040:0_h$	Control word
$607A:0_h$	Target position
$6081:0_h$	Profile velocity
$6083:0_h$	Profile acceleration)
$6084:0_h$	Profile deceleration
$6060:0_h$	Mode of operation

Adapting the Mapping for TxPDO

Objects to map in TxPDO are listed in the following table

Index:Subindex	Description
$6041:0_h$	Status word
$6061:0_h$	Mode of operation display

Example

The table provides an example of the steps to follow in order to execute relative movements.

Step	Action PDO type	Description Index/Subindex	Value
1	Set acceleration (for example 100 min^{-1}/s) RxPDO	Profile acceleration $6083:0_h$	64_h
2	Set deceleration (for example 300 min^{-1}/s) RxPDO	Profile deceleration $6084:0_h$	$012C_h$
3	Set target velocity (for example 60 min^{-1}) RxPDO	Profile velocity $6081:0_h$	$3C_h$
4	Enable power stage step1 RxPDO	Control word $6040:0_h$	00_h
5	Enable power stage step2 RxPDO	Control word $6040:0_h$	06_h
6	Enable power stage step3 RxPDO	Control word $6040:0_h$	$0F_h$
7	Check whether power stage has been enabled TxPDO	Status word $6041:0_h$	4637_h
8	Set the operating mode RxPDO	Mode of operation $6060:0_h$	01_h
9	Check whether operating mode has been set TxPDO	Mode of operation display $6060:0_h$	01_h
10	Set target position (for example 10000_usr RxPDO	Target position $6081:0_h$	2710_h
11	Start relative movement RxPDO	Control word $6040:0_h$	$5F_h$
12	Check whether target position has been reached TxPDO	Status word $6041:0_h$	5637_h
13	Reset bit “New setpoint” RxPDO	Control word $6040:0_h$	$4F_h$
14	Check whether new target position has been accepted TxPDO	Status word $6041:0_h$	4637_h

Section 18.6
Operating Mode Profile Velocity

Operating Mode Profile Velocity

Description

In the operating mode Profile Velocity (PV), the drive performs a movement with the transmitted target velocity.

The motion profile is generated by the drive, taking into account the target values received from the master controller.

Target values include target velocity, acceleration, and deceleration.

The operating mode is selected by writing 3 in the object `Mode of operation` 6060_h.

Starting and Terminating the Operating Mode

The bits movement is started via the `Controlword` 6040_h.

The operating mode is terminated when the motor is at standstill and if one of the following conditions is met:
- Stop caused by Halt or Quick Stop
- Stop caused by a detected error
- Switch to another operating mode

Source of Reference Value Signals

The object `Target velocity` $60FF_h$ provides the target value.

The target velocity is limited to the setting in `Max Profile Velocity` $607F_h$.

Modified settings become active immediately.

Source of Reference Value Signals

The object `Target velocity` $60FF_h$ provides the target velocity value.

The object `Profile acceleration` 6083_h provides the acceleration value.

The object `Profile deceleration` 6084_h provides the deceleration value.

The target velocity is limited to the setting in `Max Profile Velocity` $607F_h$.

Modified settings become active immediately.

Control Word

In the operating mode, the operating mode-specific bits in the `Controlword` 6040_h have no significance.

Status Word

Information on the current movement is available via bits 10 and 12 … 15 in the `Statusword` 6041_h.

Bit	Name	Meaning
Bit 10	Target reached	0: Target velocity not reached 1: Target velocity reached
Bit 12	-	0: Velocity = >0 1: Velocity = 0
Bit 13	Reserved	Not relevant for this operating mode
Bit 14	x_end	0: Operating mode started 1: Operating mode terminated
Bit 15	ref_ok	1: Drive has valid reference point

Section 18.7
Operating Mode Profile Torque

Operating Mode Profile Torque

Description

In the operating mode Profile Torque (PT), the drive performs a movement with the transmitted target torque.

The motion profile is generated by the drive, taking into account the target value received from the master controller.

The operating mode is selected by writing 4 in the object `Mode of operation` 6060_h.

Starting and Terminating the Operating Mode

The bits movement is started via the `Controlword` 6040_h.

The operating mode is terminated when the motor is at standstill and if one of the following conditions is met:
- Stop caused by Halt or Quick Stop
- Stop caused by a detected error
- Switch to another operating mode

Source of Reference Value Signals

The object `Target torque` 6071_h provides the target value.

100.0% correspond to the continuous stall torque.

Target values are in increments of 0.1%.

Modified settings become active immediately.

Control Word

In the operating mode, the operating mode-specific bits in the `Controlword` 6040_h have no significance.

Status Word

Information on the current movement is available via bits 10 and 12 … 15 in the `Statusword` 6041_h.

Bit	Name	Meaning
Bit 10	Target reached	0: Target torque not reached 1: Target torque reached
Bit 12	-	Not relevant for this operating mode
Bit 13	x_err	0: No error detected 1: An error has been detected
Bit 14	x_end	0: Operating mode started 1: Operating mode terminated
Bit 15	ref_ok	1: Drive has valid reference point

Parameterization

In the operating mode Profile Torque, the motion profile for torque can be adjusted via the parameter `Torque slope` 6087_h.

Index	Name	Object type Data type Access	PDO mapping object	Minimum value Factory setting Maximum value
6087_h	Torque Slope 100% of the torque setting correspond to the nominal torque. Unit: 1/1000 of nominal torque/s Example: A ramp setting of 10000%/s results in a torque change of 100% of the nominal torque in 0.01s.	VAR UINT32 rww	Yes	1 - 30000000

Section 18.8
Operating Mode Homing

Operating Mode Homing

Description

In the operating mode Homing, a reference is generated between a mechanical position and the actual position of the motor.

A reference between a mechanical position and the actual position of the motor is generated by means of a reference movement or by means of position setting.

A successful reference movement or position setting homes the motor and the zero point becomes valid.

The zero point is the point of reference for absolute movements in the operating mode Profile Position.

A movement can be made using different methods:

- Reference movement to a limit switch
  In the case of a reference movement to a limit switch, a movement to the negative limit switch or the positive limit switch is performed. When the limit switch is reached, the motor is stopped and a movement is made back to the switching point of the limit switch. From the switching point of the limit switch, a movement is made to the next index pulse of the motor or to a parameterizable distance from the switching point. The position of the index pulse or the position of the parameterizable distance from the switching point is the reference point.
- Reference movement to the reference switch
  In the case of a reference movement to the reference switch, a movement to the reference switch is performed. When the reference switch is reached, the motor is stopped and a movement is made back to the switching point of the reference switch. From the switching point of the reference switch, a movement is made to the next index pulse of the motor or to a parameterizable distance from the switching point. The position of the index pulse or the position of the parameterizable distance from the switching point is the reference point.
- Reference movement to the index pulse
  In the case of a reference movement to the index pulse, a movement is made from the actual position to the next index pulse. The position of the index pulse is the reference point.
- Position setting
  In the case of position setting, the actual position of the motor is set to a specified position value.

A reference movement must be terminated without interruption for the new zero point to be valid. If the reference movement is interrupted, it must be started again.

Procedure

- Set `Mode of operation` 6060_h to operating mode Homing (6).
- Set `Home offset` $607C_h$.
- Set `Home method` 6098_h, the value range is 1 to 35 and specifies the different homing methods.
- Set `Home speeds 6099:1`$_h$ to the value for velocity for the search for the limit switches (unit = rpm).
- Set `Home speeds 6099:2`$_h$ to the value for velocity for the search for the index pulse (unit = rpm).
- Set `Home acceleration` $609A_h$ to the value for the acceleration ramp (unit = ms from 0 to 3000 rpm).

Starting the Operating Mode

The operating mode must be set in the parameter `Modes of Operation` 6060_h. Writing the parameter value causes the operating mode to start.

The movement is started via the `Controlword` 6040_h.

Controlword

Bit 4 in the parameter `Controlword 6040`$_h$ starts a movement, bit 8 terminates the movement.

Controlword	Meaning
Bit 4: Homing operation start	Start homing
Bits 5 … 6: Operating mode-specific	Not relevant for this operating mode
Bit 8: Halt	Triggers a Halt
Bit 9: Operating mode-specific	Not relevant for this operating mode

Statusword

Statusword	Meaning
Bit 10: Target Reached	0: Homing not completed 1: Homing completed
Bit 12: Homing attained	Homing successfully completed
Bit 13: x_err	0: No error has been detected 1: An error has been detected
Bit 14: Operating mode-specific	Not relevant for this operating mode
Bit 15: Operating mode-specific	Not relevant for this operating mode

Terminating the Operating Mode

The operating mode is terminated when the motor is at a standstill and one of the following conditions is met:

- Homing successful
- Stop caused by "Halt" or "Quick Stop"
- Stop caused by a detected error

Section 18.9
Operating Mode Interpolated Position

Operating Mode Interpolated Position

Description

In the operating mode Interpolated Position, the drive follows the position values transmitted on a cyclic basis. The transmitted values are linearly interpolated within the drive.

This mode uses a buffer of position commands. The buffer size is always 1, thus it is not possible to give a list of target position commands in advance

The monitoring functions Heartbeat and Node Guarding cannot be used in this operating mode.

Check cyclical reception of PDOs at the PLC in order to detect an interruption of the connection.

The reference positions are transmitted synchronously with each cycle. The cycle time of a cycle can be set from 1 … 20 ms.

The movement to the reference positions starts with the SYNC signal.

The drive performs an internal fine interpolation with a raster of 250 µs.

The operating mode is selected by writing 7 in the object `Mode of operation` 6060_h.

Starting and Terminating the Operating Mode

The bits movement is started via the `Controlword` 6040_h.

The operating mode is terminated when the motor is at standstill and if one of the following conditions is met:
- Target position reached
- Stop caused by Halt or Quick Stop
- Stop caused by a detected error
- Switch to another operating mode

Source of Reference Value Signals

The object `Target position` $60C1_h$ provides the target position value.

The target position minimum and maximum values depends on
- Scaling factor
- Software limit switches if they are activated

The object `Target velocity` 6081_h provides the target velocity value.

The object `Profile acceleration` 6083_h provides the acceleration value.

The object `Profile deceleration` 6084_h provides the deceleration value.

The target velocity is limited to the setting in `Max Profile Velocity` $607F_h$.

The object `Interpolation time period` $60C2_h$ consist of:
- `Interpolation time units` $60C2{:}01_h$ which specifies the interpolation time.
- `Interpolation time index` $60C2{:}02_h$ which specifies the time basis. The value of -3 corresponds to a time basis in milliseconds.

NOTE: The interpolation time period must be configured with the same value of cycle ticks as configured in the EtherCAT controller software.

The object `Interpolation sub mode select` $60C0_h$ allows to select the interpolation mode:
- 0: Linear interpolation.
- 1: Cubic interpolation with position only. This forces the interpolated path to pass via the original position commands sent by the controller.
  NOTE: This may cause an abrupt velocity profile when velocity changes.

The value of this object cannot be modified when ESM operating state is **Operationnal**.

Modified settings become active immediately.

Control Word

In the operating mode, the bit 4 and the bit 8 in the `Controlword 6040`$_h$ start a movement.

Bit	Name	Meaning
Bit 4	Enable IP mode	0: Interpolated position mode not active 1: Interpolated position mode active
Bit 8	Halt	0: No Halt command 1: Stop movement with Halt

Status Word

Information on the current movement is available via bits 10 and 12 … 15 in the `Statusword 6041`$_h$.

Bit	Name	Meaning
Bit 10	Target reached	0: Target position not reached 1: Target position reached
Bit 12	-	0: New position possible 1: New target position accepted
Bit 13	x_err	0: No error detected 1: A following error has been detected
Bit 14	x_end	0: Operating mode started 1: Operating mode terminated
Bit 15	ref_ok	1: Drive has valid reference point

Section 18.10
Operating Mode Jog

Operating Mode Jog

Description

In the operating mode Jog, the drive performs a movement with the transmitted jog target value.

The motion profile is generated by the drive, taking into account the target values received from the master controller.

The operating mode is selected by writing -1 in the object `Mode of operation` 6060_h.

Starting and Terminating the Operating Mode

The bits movement is started via the `Controlword` 6040_h.

The operating mode is terminated when the motor is at standstill and if one of the following conditions is met:
- Stop caused by Halt or Quick Stop
- Stop caused by a detected error
- Switch to another operating mode

Source of Reference Value Signals

The jog method is set with the object `Jog Method` 4453_h.
- 0: jog operation at constant speed
- 1: Move a distance during a time, and start a jog operation at constant speed

The fast speed is set with the object `Jog Speed Fast` 4450_h.

The slow speed is set with the object `Jog Speed Slow` 4454_h.

The distance is set with the object `Jog Step` 4452_h.

The time is set with the object `Jog Time` 4451_h.

The target velocity is limited to the setting in `Max Profile Velocity` $607F_h$.

The object `Profile acceleration` 6083_h provides the acceleration value.

The object `Profile deceleration` 6084_h provides the deceleration value.

Modified settings become active immediately.

Control Word

In the operating mode, the bits 4 … 6 in the `Controlword` 6040_h start a movement

Bit	Name	Meaning
Bit 4	Forward	Movement in positive direction
Bit 5	Reverse	Movement in negative direction
Bit 6	Speed	0: Slow speed 1: Fast speed

NOTE: If bit 4 and bit 5 are both at active state, it stops the movement.

Status Word

Information on the current movement is available via bits 10 and 12 … 15 in the `Statusword` 6041_h.

Bit	Name	Meaning
Bit 10	Reserved	Not relevant for this operating mode
Bit 12	-	Not relevant for this operating mode
Bit 13	x_err	0: No error detected 1: An error has been detected
Bit 14	x_end	0: Operating mode started 1: Operating mode terminated
Bit 15	ref_ok	1: Drive has valid reference point

Part VIII
Diagnostics and Troubleshooting

Chapter 19
Diagnostics and Troubleshooting

What Is in This Chapter?

This chapter contains the following topics:

Topic	Page
EtherCAT Status	306
Diagnostics Via the Integrated HMI	308
Diagnostics Via the Signal Outputs	309
Diagnostics Via the Commissioning Software	309
Diagnostics Via the Fieldbus	310
Connection for Fieldbus Mode	313
Alert Codes and Error Codes	314

EtherCAT Status

Overview

The EtherCAT status information is available:

- On the product front panel with 2 dedicated LEDs
- By reading the EtherCAT diagnostic parameters

EtherCAT Status LEDs

Two network diagnostic LEDs are located on the front panel of the drive.

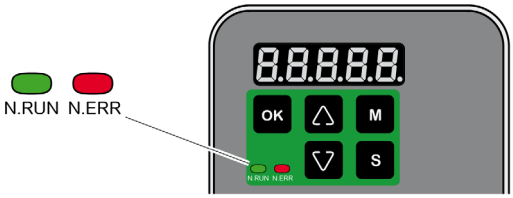

N.RUN: Network RUN Status

This LED indicates the EtherCAT status:

Color & Status	Description
OFF	EtherCAT state: `INIT`
Green flashing	EtherCAT state: `PRE-OPERATIONAL`
Green single flashing	EtherCAT state: `SAFE-OPERATIONAL`
Green ON	EtherCAT state: `OPERATIONAL`

N.ERR: Network Error Status

This LED indicates the EtherCAT error status:

Color & Status	Description
OFF	No error detected
Red flashing	Invalid configuration
Red single flashing	Local error detected (such as synchronization error)
Red double flashing	Watchdog timeout

LED State Diagram

The following diagrams present the possible LED states:

Flashing

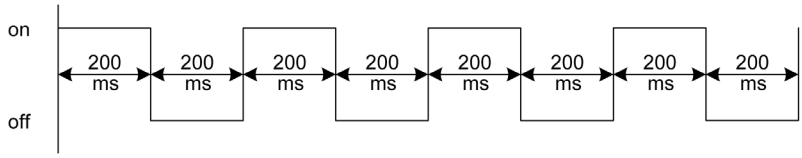

Single flashing

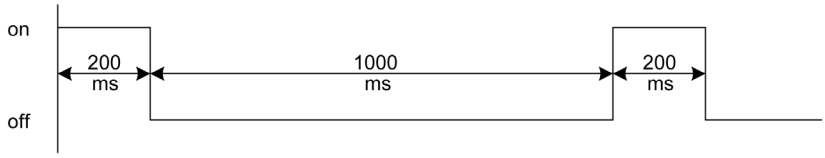

Double flashing

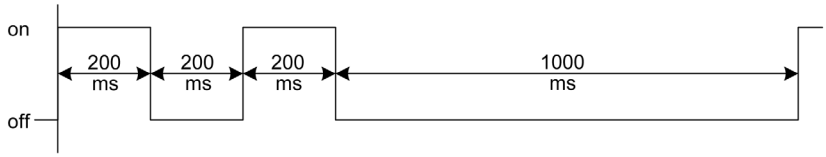

Diagnostics Via the Integrated HMI

Modbus Activity

The left most decimal point in the integrated HMI indicates Modbus activity by flashing.

Error Memory

Parameters `P4-00` to `P4-04` allow you to read the error memory.

The error memory also contains a history of the last 5 detected errors.

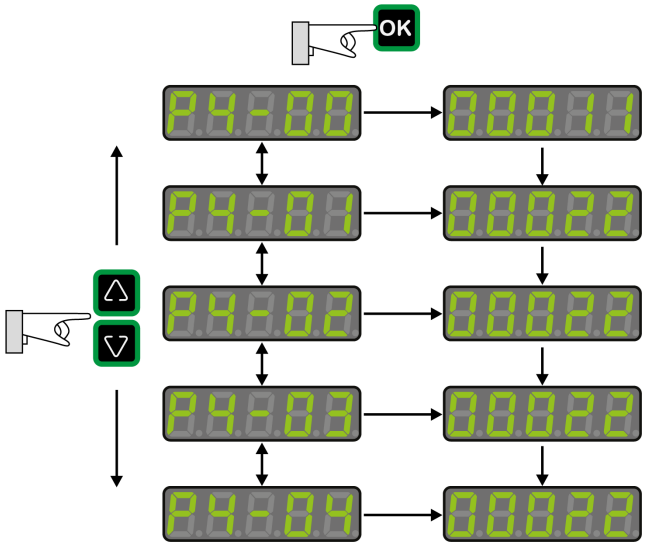

Parameter	Description
P4-00	Error number of the most recently detected error
…	…
P4-04	Error number of the oldest detected error

The parameter `P0-47` allows you to read the last detected alert.

Diagnostics Via the Signal Outputs

The signal outputs allow you to indicate, among other things, operating states and detected errors. The following list is an excerpt of the parameterizable signal output functions. For additional signal output functions, refer to Setting the Digital Signal Outputs *(see page 270)*.

Setting A for `P2-18` ... `P2-21`	Short name	Name of the output function	Description
1	SRDY	Servo Ready	The signal output function SRDY indicates that no errors are presently detected, i.e. the drive is not in the operating state Fault.
2	SON	Servo On	The signal output function SON indicates that the drive is in the operating state Operation Enabled.
7	ERROR	Error Detected	The signal output function ERROR indicates that an error has been detected and that the drive has switched to the operating state Fault. For further information, refer to Diagnostics and Troubleshooting *(see page 305)*.
11	WARN	Advisory or Alert Signal activated	The signal output function indicates that one of the following conditions has been detected: Hardware limit switch triggered, undervoltage, Nodeguard alert, Operational Stop (OPST).

Diagnostics Via the Commissioning Software

See the information provided with the commissioning software for details on how to display the device state via the commissioning software LXM28 DTM Library.

Diagnostics Via the Fieldbus

Reading Error Numbers

The object $603F_h$ contains the most recently detected error.

Index	Name	Object type Data type Access	PDO mapping object	Minimum value Factory settings Maximum value
$603F_h$	Error Code	VAR UINT16 ro	Yes	0 - 65535

The following table is sorted by EtherCAT error numbers and shows the corresponding Error Code *(see page 316)* (ALnnn).

Value (hex)	Value (dec)	Error Code
2214_h	8724	AL001
2310_h	8976	AL006
2311_h	8977	AL508
2380_h	9088	AL532
2381_h	9089	AL539
2382_h	9090	AL570
3110_h	12560	AL002
3120_h	12576	AL003
3180_h	12672	AL005
3181_h	12673	AL501
3182_h	12674	AL505
3183_h	12675	AL022
3184_h	12676	AL575
3185_h	12677	AL576
3186_h	12678	AL578
3187_h	12679	AL579
3199_h	12697	AL568
4080_h	16512	AL528
4081_h	16513	AL529
4096_h	16534	AL561
4310_h	17168	AL016
4380_h	17280	AL574
4410_h	17424	AL514
5111_h	20753	AL525 AL526
5530_h	21808	AL504
5581_h	21889	AL503
5582_h	21890	AL522
5583_h	21891	AL523
5585_h	21893	AL017
5586_h	21894	AL507
6380_h	25472	AL520
6581_h	25985	AL502
7081_h	28801	AL533

Value (hex)	Value (dec)	Error Code
7090_h	28816	AL535
7091_h	28817	AL013
7095_h	28821	AL595
7121_h	28961	AL547
7182_h	29058	AL534
7198_h	29080	AL563
7380_h	29568	AL026
7386_h	29574	AL3E1
7387_h	29575	AL018
$738D_h$	29581	AL567
7393_h	29587	AL517
7398_h	29592	AL573
7399_h	29593	AL577
7580_h	30080	AL553
7581_h	30081	AL554
7582_h	30082	AL557
7583_h	30083	AL020
7584_h	30084	AL569
8130_h	33072	AL180
8210_h	33296	AL597
8311_h	33553	AL030
8380_h	33664	AL596
8481_h	33921	AL007
8482_h	33922	AL555
8611_h	34321	AL009
8680_h	34432	AL564
8689_h	34441	AL572
$F080_h$	61568	AL401
$FF01_h$	65281	AL558
$FF02_h$	65282	AL025
$FF04_h$	65284	AL588
$FF10_h$	65296	AL015
$FF11_h$	65297	AL014
$FF12_h$	65298	AL283
$FF13_h$	65299	AL285
$FF15_h$	65301	AL580
$FF97_h$	65431	AL008

SDO Abort Codes

SDO Abort Code	Meaning
05040001_h	Client/server command specifier not valid or undetermined
06010002_h	Attempt to write a read-only object
06020000_h	Object does not exist in the object dictionary
06040041_h	Object cannot be mapped to the PDO
06040042_h	The number and length of the objects to be mapped would exceed PDO length
06060000_h	Access impossible due to a hardware error (store or restore error)
06070010_h	Data type does not match, length of service parameter does not match
06090011_h	Subindex does not exist
06090030_h	Value range of parameter exceeded (only for write access)
08000000_h	General error
$080000a1_h$	Object error reading from non-volatile memory
$080000a2_h$	Object error writing to non-volatile memory
$080000a3_h$	Invalid Range accessing non-volatile memory
$080000a4_h$	Checksum error accessing non-volatile memory
$080000a5_h$	Password error writing encryption zone
08000020_h	Data cannot be transferred to or stored in the application (store or restore signature error)
08000021_h	Data cannot be transferred to or stored in the application because of the local control (incorrect state)

Connection for Fieldbus Mode

Description

If the product cannot be addressed via the fieldbus, check the following connections:

- Power connections to the device.
- Network cable and network wiring.
- Network connection to the device.

Alert Codes and Error Codes

Meaning of an Alert

An alert indicates a potential issue that was detected by a monitoring function. An alert does not trigger a transition of the operating state.

Number	Description	Cause	Remedy
AL014	Negative hardware limit switch triggered	-	-
AL015	Positive hardware limit switch triggered	-	-
AL283	Positive software limit switch triggered	-	-
AL285	Negative software limit switch triggered	-	-
Wn023	Alert threshold reached: Motor overload (foldback)	The foldback current of the motor has dropped below the alert threshold specified via the parameter P1-28.	Verify correct settings of the parameter P1-28 for the foldback current of the motor.
Wn700	Safety function Safe Torque Off (STO) triggered while the power stage was disabled	The safety function STO has been triggered or the signal for the safety function STO is not properly connected. If this condition is detected while the power stage is enabled, the drive detects an error. If this condition is detected while the power stage is disabled, the drive detects an alert.	Check whether the safety function STO was triggered intentionally. If not, verify correct connection of the signal of the safety function STO.
Wn701	Alert threshold reached: Drive overload (foldback)	The foldback current of the drive has dropped below the alert threshold specified via the parameter P1-24.	Verify correct settings of the parameter P1-24 for the foldback current of the drive.
Wn702	The DC bus voltage has dropped below the alert threshold.	Power supply loss, poor power supply.	Verify correct mains supply. Verify that the undervoltage limit is set correctly via the parameter P4-24.
Wn703	Alert threshold reached: Power stage overtemperature	Ambient temperature is too high, fan is inoperative, dust.	Verify correct operation of the fan. Improve the heat dissipation in the control cabinet. Remove pollution and verify that dust cannot get into the control cabinet or into the drive.
Wn704	Alert threshold reached: Motor overtemperature	The motor temperature is excessively high.	Verify correct settings of the parameters for temperature monitoring. Verify proper ventilation and heat dissipation of the motor. Clean off pollutants such as dust. Verify that the motor is evenly mounted to the flange plate. Increase the size of the flange plate to which the motor is mounted to improve heat dissipation. Verify that the motor is properly sized for the application.
Wn707	Alert threshold reached: Drive overtemperature (controller)	Ambient temperature is too high, fan is inoperative, dust.	Verify correct operation of the fan. Improve the heat dissipation in the control cabinet. Remove pollution and verify that dust cannot get into the control cabinet or into the drive.
Wn713	Positive hardware limit switch and negative hardware limit triggered	-	-
Wn716	Positive software limit switch and negative software limit triggered	-	-

Number	Description	Cause	Remedy
Wn728	Alert: Missing mains supply, undervoltage mains supply	At least one mains phase is missing. Mains voltage is out of range. Mains frequency is out of range.	Verify correct connection of mains supply. Verify that the values of the mains power supply network comply with the technical data.
Wn729	Modbus: Node Guarding error detected	Incorrect Modbus connection, incorrect data from Modbus master.	Verify correct Modbus connection. Verify correct operation of Modbus master.
Wn730	Alert threshold reached: Braking resistor overload	The permissible braking resistor power has been exceeded.	Verify correct rating of the braking resistor used. Verify your application.
Wn731	Encoder error detected	Refer to parameter P8-49 for details.	-
Wn732	Alert threshold reached: Processing time too long	-	-
Wn734	Alert threshold reached: Drive overtemperature (IPM)	Ambient temperature is too high, fan is inoperative, dust.	Verify correct operation of the fan. Improve the heat dissipation in the control cabinet. Remove pollution and verify that dust cannot get into the control cabinet or into the drive.
Wn737	Parameters have been reset to the factory settings, but are not yet saved to the non-volatile memory.	-	Use parameter P2-08 = 11 to save parameters reset to the factory settings to the non-volatile memory and restart the drive.
Wn739	Temperature value for monitoring function not available	-	-
Wn742	Motor type has changed	The type of motor connected is different from the previously connected type of motor.	Reset the drive to the factory settings.
Wn743	Fan circuit warning	The fan circuit is either overloaded or disconnected.	Check for fan short circuit or disconnection.
Wn744	Excessive electronic noise	-	Check proper grounding and shielding. Use line filter.
Wn745	Configured feedbacktype and actual connected encoder mismatch	The connected encoder does not correspond to configured feedback type.	Check that configured feedback type and connected encoder match.
Wn746	Encoder overtemperature	-	-
Wn747	Encoder internal flash memory error detected	-	-
Wn748	Encoderfeedback error detected	The device has detected unusually high shaft displacement. The device can still operate correctly; but position error might be higher than usual.	-

Meaning of an Error

An error is a discrepancy between a computed, measured, or signaled value or condition and the specified or theoretically correct value or condition detected by a monitoring function. An error triggers a transition of the operating state.

Number	Short description	Cause	Remedy
AL001	Power stage overcurrent	An overcurrent has been detected at the power stage which may be caused by a short circuit or by incorrect settings of the current loop parameters. This condition may occur up to three times in succession. After the third time, a time delay of one minute must pass before the power stage can be enabled again.	Verify correct connection of the motor. Verify correct settings of the parameters for the current loop.
AL002	DC bus overvoltage	The DC bus voltage exceeded the maximum value.	Verify your application. Reduce the external load, the motor velocity, or the deceleration. Use an appropriately rated braking resistor, if necessary.
AL003	DC bus undervoltage	Power supply loss, poor power supply.	Verify correct mains supply. Verify that the undervoltage limitation is set correctly via the parameter P4-24.
AL005	Braking resistor overload	The braking resistor has been on for such a long period of time that its overload capability has been exceeded.	Verify your application. Reduce the external load, the motor velocity, or the deceleration. Use a braking resistor with a greater rating, if necessary.
AL006	Motor overload (foldback)	The foldback current of the motor has dropped below the value specified via the parameter P1-27.	Verify correct settings for the parameter P1-27.
AL007	Actual motor velocity too high.	The actual motor velocity exceeded the velocity limitation by more than 20% (P1-55).	Verify that the velocity limitation set via the parameter P1-55 matches the requirements of the application. Verify that the values for the tuning parameters are suitable.
AL008	Frequency of reference value signal is too high	The frequency of the pulse signal (A/B, Pulse/Direction, CW/CCW) exceeds the specified range. Received pulses may be lost.	Adapt the output pulse frequency of the external source to fit the input specification of the drive. Adapt the gear ratios to the application requirements (parameters P1-44, P1-45).
AL009	Position deviation too high (following error)	The position deviation has exceeded the maximum permissible position deviation specified via the parameter P2-35 and the drive has detected a following error.	Verify your application. Reduce the external load. Increase the permissible position deviation via the parameter P2-35. Reduce the motor velocity via the parameters P1-09 … P1-11. Increase the torque limitation via the parameters P1-12 … P1-14.
AL013	The input to which the signal input function OPST is assigned has been activated.	-	Identify the cause which has triggered the signal input function OPST. Remove the cause. If your application does not require the signal input function OPST, disable this signal input function.
AL016	Power stage overtemperature	Ambient temperature is too high, fan is inoperative, dust.	Verify correct operation of the fan. Improve the heat dissipation in the control cabinet. Remove pollution and verify that dust cannot get into the control cabinet or into the drive.
AL017	Error detected in non-volatile memory	The drive was reset to the factory settings via parameter P2-08.	Use parameter P2-08 = 11 to save parameters reset to the factory settings to the non-volatile memory and restart the drive. Contact technical support.

Number	Short description	Cause	Remedy
AL018	Encoder simulation frequency exceeded 4 MHz	The computed equivalent encoder output frequency exceeds the maximum limit of 4 MHz for this signal.	Reduce the resolution of the encoder simulation via the parameter P1-46 or reduce the maximum velocity.
AL020	Modbus: Node Guarding error detected	Incorrect Modbus connection, incorrect data from Modbus master.	Verify correct Modbus connection. Verify correct operation of Modbus master.
AL022	Missing mains supply, undervoltage mains supply	At least one mains phase is missing. Mains voltage is out of range. Mains frequency is out of range.	Verify correct connection of mains supply. Verify that the values of the mains power supply network comply with the technical data.
AL025	Not possible to read data of electronic motor nameplate	Incorrect or missing motor data. Motor without electronic motor nameplate has been connected.	Verify that the drive and the connected motor are a permissible product combination. Verify correct connection of the encoder. Contact Technical Support or replace the motor.
AL026	Error detected in communication with motor encoder	Communication with the encoder was not initialized correctly.	Verify correct connection of the encoder. Contact Technical Support or replace the motor.
AL030	Motor torque too high for an excessive period of time	The motor torque has exceeded the value specified via the parameter P1-57 for a period of time exceeding the value specified via the parameter P1-58.	Verify your application. Verify that no movements are made up to a mechanical stop (for example, use limit switches). Verify that the values for the parameters P1-57 and P1-58 are suitable.
AL401	Fieldbus: Communication error detected	While the power stage was enabled, a command was received requesting a different communication state.	Verify that the master does not try to change the communication state while the power stage of the drive is enabled.
AL501	Safety function Safe Torque Off (STO) triggered	The safety function STO has been triggered or the signal for the safety function STO is not properly connected. If this condition is detected while the power stage is enabled, the drive detects an error. If this condition is detected while the power stage is disabled, the drive detects an alert.	Check whether the safety function STO was triggered intentionally. If not, verify correct connection of the signal of the safety function STO.
AL502	System error detected (FPGA)	-	Contact technical support.
AL503	System error detected (non-volatile memory)	-	Contact technical support.
AL504	System error detected (non-volatile memory)	-	Contact technical support.
AL505	DC bus voltage measurement	An error was detected in the circuit that measures the DC bus voltage.	Perform a Fault Reset. Restart the drive. If the error persists, contact Technical Support.
AL507	System error detected (NV access)	-	Contact technical support.
AL508	Drive overload (foldback)	The foldback current of the drive has dropped below the value specified via the parameter P1-23.	Verify correct settings for the parameter P1-23.
AL514	Motor overtemperature	The motor temperature is excessively high.	Verify correct settings of the parameters P1-62 and P1-63 for temperature monitoring. Verify proper ventilation and heat dissipation of the motor. Clean off pollutants such as dust. Verify that the motor is evenly mounted to the flange plate. Increase the size of the flange plate to which the motor is mounted to improve heat dissipation. Verify that the motor is properly sized for the application.

Number	Short description	Cause	Remedy
AL517	Encoder overvoltage or overcurrent	The current supplied by the drive for the 5 V encoder supply has exceeded the limit. This condition may occur up to three times in succession. After the third time, a time delay of one second must pass before the power stage can be enabled again.	Verify correct connection of the encoder (short circuits). Verify the current consumption of the encoder.
AL520	Target position rejected	A target position was rejected because it would have caused the motor to exceed the maximum velocity.	Verify that target positions do not lead to excessive motor velocities.
AL523	System error detected (self-test)	The self-test has detected an error.	Contact technical support.
AL525	Reserved	–	–
AL526	Reserved	–	–
AL527	System error detected (Watchdog)	The Watchdog function has detected a system error.	Restart the drive. If the error persists, contact Technical Support.
AL528	Drive overtemperature (IPM)	Ambient temperature is too high, fan is inoperative, dust.	Verify correct operation of the fan. Improve the heat dissipation in the control cabinet. Remove pollution and verify that dust cannot get into the control cabinet or into the drive.
AL529	Drive overtemperature (controller)	Ambient temperature is too high, fan is inoperative, dust.	Verify correct operation of the fan. Improve the heat dissipation in the control cabinet. Remove pollution and verify that dust cannot get into the control cabinet or into the drive.
AL532	Calculated offsets for current sensors out of range	The calculated offsets for the current sensors are out of range.	Perform a Fault Reset. Restart the drive. If the error persists, contact Technical Support.
AL533	Reserved	–	–
AL534	Pulse signal missing	One of the pulse signals is not connected.	Verify correct connection of the pulse inputs.
AL535	System error detected (FPGA does not match firmware)	The firmware version is not suitable for the drive.	Update the firmware of the drive. Contact technical support.
AL539	Motor phase missing	One of the motor phases is not connected.	Verify correct connection of the motor phases. Contact technical support.
AL547	Motor blocked	The motor was blocked mechanically, for example, by a mechanical stop or by the load.	Remove condition causing the mechanical blocking. Verify your application.
AL555	Velocity deviation too high	The deviation between actual velocity and reference velocity has exceeded the maximum velocity deviation specified via the parameter P2-34.	Verify your application. Verify that the values for the tuning parameters are suitable. Increase the value for the maximum velocity deviation in the parameter P2-34.
AL557	No target values received via the fieldbus	No target values have been received via the fieldbus three times in succession.	Perform a Fault Reset. Verify that target values are transmitted via the fieldbus.
AL558	System error detected	-	Contact technical support.
AL560	Power stage supply off	-	Power on the power stage supply.
AL561	Temperature sensor inoperative	-	Restart the drive. If the error persists, contact Technical Support.
AL563	Commutation error detected	Motor phases have been interchanged.	Verify correct connection of the motor phases.
AL567	System error detected (encoder)	Refer to parameter P8-48 for details.	Contact technical support.
AL568	Braking resistor overload	The permissible braking resistor power has been exceeded.	Verify correct rating of the braking resistor used. Verify your application.

Number	Short description	Cause	Remedy
AL569	Configuration not correctly transferred via Modbus	-	Verify correct connection. Verify that configuration file and drive are compatible.
AL570	Overcurrent detected at one of the digital outputs	-	Verify correct wiring of the digital outputs. Verify that there are no short circuits.
AL572	Position deviation too high (following error)	The position deviation has exceeded the maximum permissible position deviation specified via the parameter P2-35 and the drive has detected a following error.	Verify your application. Reduce the external load. Increase the permissible position deviation via the parameter P2-35. Reduce the motor velocity via the parameters P1-09 … P1-11. Increase the torque limitation via the parameters P1-12 … P1-14.
AL573	The returned position values are no longer considered valid	–	–
AL574	The encoder temperature is too high	–	–
AL575	The encoder supply voltage has dropped under operational value	–	–
AL576	The multi turn encoder battery voltage has dropped under 3 Vdc	–	–
AL577	The multi turn encoder requires an explicit configuration command	–	–
AL578	Internal position synchronization error detected between the multi turn and the single turn modules	–	–
AL579	Generic error code of the multi turn module is detected	–	–
AL5780	The encoder firmware cannot operate on the provided hardware	–	–
AL5781	The drive firmware cannot operate with the provided encoder version	–	–
AL5782	The drive firmware cannot operate on the provided hardware	–	–
AL588	Reserved	–	–
AL595	Impermissible combination of drive and motor	-	Use an approved drive/motor combination.
AL596	Unstable current loop	Excessive overshoot in current loop.	Verify correct settings of the parameters for the current loop.
AL597	R_PDO is too short	-	Verify correct PDO settings for drive and master.

Part IX
Service, Maintenance and Disposal

Chapter 20
Service, Maintenance, and Disposal

What Is in This Chapter?

This chapter contains the following topics:

Topic	Page
General	324
Service Address	325
Maintenance of the Drive	326
Replacement of Drive	327
Maintenance of the Motor	328
Changing the Motor	330
Shipping, Storage, Disposal	331

General

The product may only be repaired by a Schneider Electric customer service center.

The use and application of the information contained herein require expertise in the design and programming of automated control systems.

Only you, the user, machine builder or integrator, can be aware of all the conditions and factors present during installation and setup, operation, repair and maintenance of the machine or process.

You must also consider any applicable standards and/or regulations with respect to grounding of all equipment. Verify compliance with any safety information, different electrical requirements, and normative standards that apply to your machine or process in the use of this equipment.

Many components of the equipment, including the printed circuit board, operate with mains voltage, or present transformed high currents, and/or high voltages.

The motor itself generates voltage when the motor shaft is rotated.

⚠ DANGER

ELECTRIC SHOCK, EXPLOSION, OR ARC FLASH

- Disconnect all power from all equipment including connected devices prior to removing any covers or doors, or installing or removing any accessories, hardware, cables, or wires.
- Place a "Do Not Turn On" or equivalent hazard label on all power switches and lock them in the non-energized position.
- Wait 15 minutes to allow the residual energy of the DC bus capacitors to discharge.
- Measure the voltage on the DC bus with a properly rated voltage sensing device and verify that the voltage is less than 42.4 Vdc.
- Do not assume that the DC bus is voltage-free when the DC bus LED is off.
- Block the motor shaft to prevent rotation prior to performing any type of work on the drive system.
- Do not create a short-circuit across the DC bus terminals or the DC bus capacitors.
- Replace and secure all covers, accessories, hardware, cables, and wires and confirm that a proper ground connection exists before applying power to the unit.
- Use only the specified voltage when operating this equipment and any associated products.

Failure to follow these instructions will result in death or serious injury.

Service Address

If you cannot resolve an error yourself, contact your sales office.

Have the following data available:
- Nameplate (type, identification number, serial number, DOM, ...)
- Type of error (with LED flash code or error code)
- Previous and concomitant circumstances
- Your own assumptions concerning the cause of the error

Also include this information if you return the product for inspection or repair.

If you have any questions, contact your sales office. Your sales office staff will provide you the name of a customer service office in your area.

http://www.schneider-electric.com

Maintenance of the Drive

Prior to any type of work on the drive system, consult the chapters on Installation and Commissioning for information to be observed.

Repairs cannot be made with the device installed.

Include the following points in the maintenance plan of your machine.

Connections and Fastening

- Check all connection cables and connectors regularly for damage. Replace damaged cables immediately.
- Tighten all mechanical and electrical threaded connections to the specified torque.

Cleaning

Clean dust and dirt off the product at regular intervals. Insufficient heat dissipation to the ambient air may excessively increase the temperature.

Lifetime of the Safety Function STO

The STO safety function is designed for a lifetime of 20 years. After this period, the data of the safety function are no longer valid. The expiry date is determined by adding 20 years to the DOM shown on the nameplate of the product.

- This date must be included in the maintenance plan of the system.
- Do not use the safety function after this date.

Example:

The DOM on the nameplate of the product is shown in the format DD.MM.YY, for example 31.12.08. (31 December 2008). This means: Do not use the safety function after December 31, 2028.

Replacement of Drive

Unsuitable settings or unsuitable data may trigger unintended movements, trigger signals, damage parts and disable monitoring functions. Some parameters and other operational data do not become active until after a restart.

⚠ WARNING

UNINTENDED EQUIPMENT OPERATION

- Only start the system if there are no persons or obstructions in the zone of operation.
- Do not operate the drive system with undetermined parameter values.
- Never modify a parameter value unless you fully understand the parameter and all effects of the modification.
- Restart the drive and verify the saved operational data and/or parameter values after modification.
- Carefully run tests for all operating states and potential error situations when commissioning, upgrading or otherwise modifying the operation of the drive.
- Verify the functions after replacing the product and also after making modifications to the parameter values and/or other operational data.

Failure to follow these instructions can result in death, serious injury, or equipment damage.

Prepare a list with the parameters required for the functions used.

Observe the following procedure when replacing devices:

Step	Action
1	Save all parameter settings. Save the data to your PC using the commissioning software, refer to chapter Commissioning Software *(see page 190)*.
2	Power off all supply voltages. Verify that no voltages are present.
3	Label all connections and remove all connection cables (unlock connector locks).
4	Uninstall the product.
5	Note the identification number and the serial number shown on the product nameplate for later identification.
6	Install the new product as per chapter Installation *(see page 133)*.
7	If the product to be installed has previously been used in a different system or application, you must restore the factory settings before commissioning the product.
8	Commission the product as per chapter Commissioning *(see page 177)*.

Maintenance of the Motor

Prior to any type of work on the drive system, consult the chapters on Installation and Commissioning for information to be observed.

Repairs cannot be made with the device installed.

Include the following points in the maintenance plan of your machine.

Connections and Fastening

- Inspect all connection cables and connectors regularly for damage. Replace damaged cables immediately.
- Verify that all output elements are firmly seated.
- Tighten all mechanical and electrical threaded connections to the specified torque.

Lubricating the Shaft Sealing Ring

In the case of motors with shaft sealing ring, lubricant must be applied to the space between the sealing lip of the shaft sealing ring and the shaft with a suitable non-metallic tool. If the shaft sealing rings are allowed to run dry, the service life of the shaft sealing rings will be significantly reduced.

Cleaning

If the permissible ambient conditions are not respected, external substances from the environment may penetrate the product and cause unintended movement or equipment damage.

⚠ WARNING

UNINTENDED MOVEMENT

- Verify that the ambient conditions are respected.
- Do not allow seals to run dry.
- Keep liquids from getting to the shaft bushing (for example, in mounting position IM V3).
- Do not expose the shaft sealing rings and cable entries of the motor to the direct spray of a pressure washer.

Failure to follow these instructions can result in death, serious injury, or equipment damage.

Clean dust and dirt off the product at regular intervals. Insufficient heat dissipation to the ambient air may excessively increase the temperature.

Motors are not suitable for cleaning with a pressure washer. The high pressure may force water into the motor.

When using solvents or cleaning agents, verify that the cables, cable entry seals, O-rings, and motor paint are not damaged.

Replacing the Rolling Bearing

When the rolling bearing is replaced, the motor is partially demagnetized and loses power.

NOTICE

INOPERABLE EQUIPMENT

Do not replace the rolling bearing.

Failure to follow these instructions can result in equipment damage.

Replacing the Battery for the Multi Turn Encoder

The multi turn counting is preserved through power down by the external battery located into the battery compartment.

- Do not disconnect the encoder cable from the battery compartment or the multi turn information is lost.
- Replace the battery while the encoder is powered by the drive or the multi turn information is lost.

The battery has its manufacturing date printing on it in MMYY format. The expiration date for the battery is 3 years after the manufacturing date.

On the following example, the manufacturing date of the battery is June 2016 (0616). The expiration date is June 2019.

The battery voltage is monitored by the encoder at each power on of the drive.

- An alert Wn731 related to P8-49 Bit 10 is triggered when the measured voltage is in the range 3 … 3.15 Vdc.
- An error AL567 related to P8-48 Bit 5 is triggered when the measured voltage is under 3 Vdc.
  NOTE: After replacing the battery, the detected error is cleared the next time the drive is powered on (next battery voltage measurement), or when an explicit command is sent to the encoder by setting P8-44 to the value 1.

Changing the Motor

Drive systems may perform unintended movements if unapproved combinations of drive and motor are used. Even if motors are similar, different adjustment of the encoder system may be a source of hazards. Even if the connectors for motor connection and encoder connection match mechanically, this does not imply that the motor is approved for use.

⚠ WARNING

UNINTENDED MOVEMENT

Only use approved combinations of drive and motor.

Failure to follow these instructions can result in death, serious injury, or equipment damage.

Compatibility between Drive and Motor is defined in the Drive / Motor combinations table *(see page 24)*.

Observe the following procedure when changing motors:

Step	Action
1	Switch off all supply voltages. Verify that no voltages are present.
2	Label all connections and uninstall the product.
3	Note the identification number and the serial number shown on the product nameplate for later identification.
4	Install the new product as per chapter Installation *(see page 165)*.
5	Commission the product as per chapter Commissioning *(see page 177)*.

If the connected motor is replaced by another approved motor, the new motor is automatically recognized by the drive.

Shipping, Storage, Disposal

Shipping

The product must be protected against shocks during transportation. If possible, use the original packaging for shipping.

Storage

The product may only be stored in spaces where the specified permissible ambient conditions are met.

Protect the product from dust and dirt.

Disposal

The product consists of various materials that can be recycled. Dispose of the product in accordance with local regulations.

Visit *http://www.schneider-electric.com/green-premium* for information and documents on environmental protection as per ISO 14025 such as:

- EoLi (Product End-of-Life Instructions)
- PEP (Product Environmental Profile)

Part X
Fieldbus

What Is in This Part?

This part contains the following chapters:

Chapter	Chapter Name	Page
21	EtherCAT Basics	335
22	EtherCAT Object Dictionary	343
23	EtherCAT Hardware Setup	389
24	EtherCAT Software Setup	393

Chapter 21
EtherCAT Basics

What Is in This Chapter?

This chapter contains the following topics:

Topic	Page
Software Features	336
Communication Objects	337
EtherCAT State Machine (ESM)	338
Service Data Communication	339
Process Data Communication	340

Software Features

Literature

Literature for further reading:

EtherCAT Technology Group (ETG), see *www.ethercat.org*

Lexium 28E Profile with EtherCAT

EtherCAT® is a registered trademark and patented technology, licensed by Beckhoff Automation GmbH, Germany.

The device supports CiA402 (IEC 61800-7) CANopen device profile for drives and motion control, using CANopen Over EtherCAT (CoE).

Setup Software

The following software can be used for the device commissioning:

- A Field Device Tool (FDT) like SoMove or a third-party FDT container for drive parameters access.*
- The setup software from the EtherCAT controller to insert the device in the EtherCAT network and set fieldbus parameters.

* Some restrictions may apply. Refer to the LXM28E DTM Servo Drive System.

ESI File

An ESI file (EtherCAT Slave Information, XML file format) is available for the product.

The ESI file can be downloaded on *www.schneider-electric.com*.

The ESI file must be integrated into the system of the controller.

Compatible Software

The device is compatible with:

- BECKHOFF software TwinCAT® V3.x, refer to TwinCAT Configuration *(see page 395)*.

Communication Objects

Overview

EtherCAT manages communication between the network devices with object dictionaries and objects. A network device can use process data objects (PDO) and service data objects (SDO) to request the object data from the object dictionary of another device and, if permissible, write back modified values.

- PDOs (process data objects) for transmission of process data.
- SDOs (service data object) for read and write access to the object dictionary.
- Objects for controlling EtherCAT messages:
  - SYNC object (synchronization object) for synchronization of network devices.
  - EMCY object (emergency object), for signaling detected errors of a device or its peripherals.
- Network management services:
  - ESM services for initialization and network control.
  - ESM life guarding for monitoring the network devices.
  - ESM heartbeat for monitoring the network devices.

EtherCAT State Machine (ESM)

ESM Chart

The EtherCAT State Machine (ESM) coordinates the master and slave applications at start-up and during operation. State changes are typically initiated by requests of the master. They are acknowledged by the local application after the associated operations have been executed.

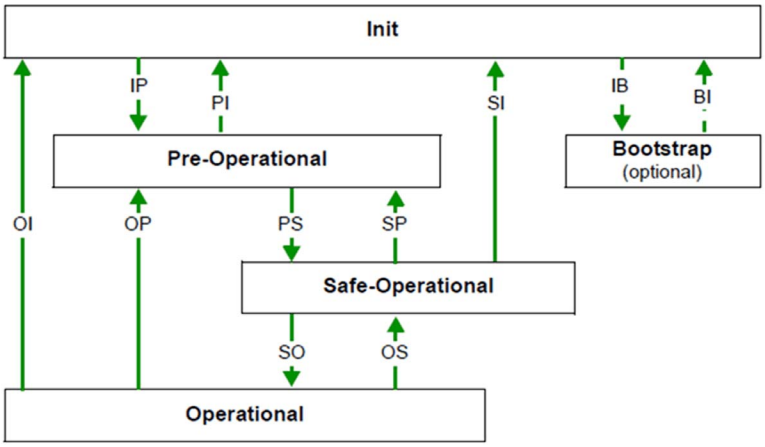

ESM States Description

The state **Init** defines the foundation of the communication relationship between the master and the slaves at the application layer. Direct communication between the master and the slave is impossible at the application layer. The master uses the Init state to initialize a set of configuration registers of the EtherCAT slave controllers. If the slaves support mailbox services, the Sync Manager is also configured in this state.

In the **Pre-Operational** state, the mailbox is active. Both master and slave use the mailbox and the corresponding protocol to interchange application-specific initialization data and parameters. In this state, process data communication is not possible. If the drive does not receive a valid mapping for the process data from the EtherCAT master, it remains in this state.

In the **Safe-Operational** state, the slave application provides current input data such as limit switch data. Output data of the master are ignored in this state. This state is not a safety function.

In the state **Operational**, the slave applications deliver current input data and the drive processes the current output data from the drive, such as target positions.

NOTE: If the PDO is deactivated, it is not possible to control the drive by the SDO.

ESM Transitions

The following table displays the services started or stopped following a state transition.

State transition	Local management service
IP	Start Mailbox Communication
PI	Stop Mailbox Communication
PS	Start Input Update
SP	Stop Input Update
SO	Start Output Update
OS	Stop Output Update
OP	Stop Output Update and Stop Input Update
SI	Stop Input Update and Stop Mailbox Communication
OI	Stop Output Update and Stop Mailbox Communication
IB	Start Bootstrap Mode, redirection to BI
BI	Restart Device

Service Data Communication

SDO Description

Service Data Objects (SDO) can be used to access the entries of an object dictionary using index and subindex. The values of the objects can be read and, if permissible, also written.

Every network device has at least one SDO server to be able to respond to read and write requests from a different device.

The TxSDO of a SDO client is used to send the request for data exchange; the RxSDO is used to receive.

Process Data Communication

PDO Mapping

Up to 10 parameters from different areas of the object dictionary can be transmitted with a PDO message. Mapping of data to a PDO message is referred to as PDO mapping.

Objects that can be used in PDO mapping are identified in the **PDO mapping object** column in the object dictionary table.

The groups of objects that are involved in PDO mapping are:
- Vendor-specific Object Group 4000h *(see page 358)*
- Device Profile Object Group 6000h *(see page 380)*

The picture below shows the data exchange between PDOs and object dictionary based on two examples of objects in TxPDO4 and RxPDO4 of the PDOs.

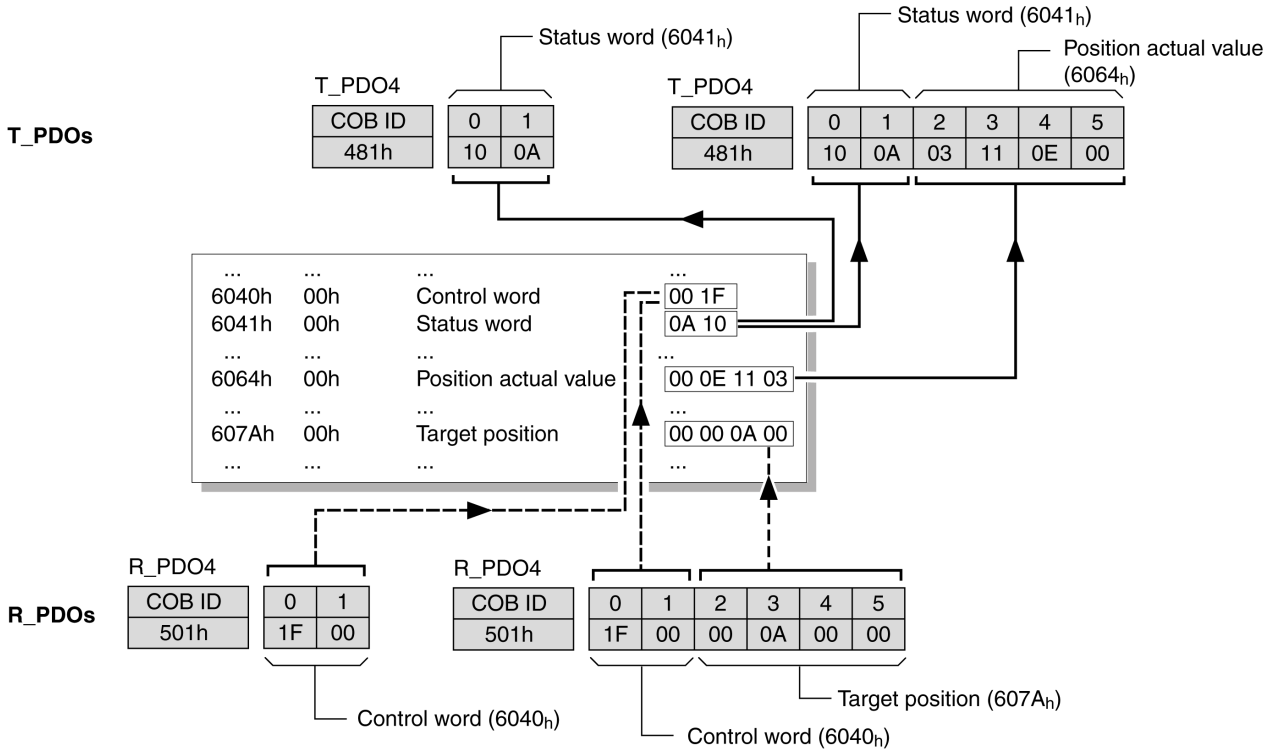

Dynamic PDO Mapping

The device uses dynamic PDO mapping. Dynamic PDO mapping means that objects can be mapped to the corresponding PDO using adjustable settings.

The settings for PDO mapping are defined in an assigned communication object for each PDO.

Object	PDO mapping for	Type
1st receive PDO mapping (1600_h)	RxPDO1	Dynamic
2nd receive PDO mapping (1601_h)	RxPDO2	Dynamic
3rd receive PDO mapping (1602_h)	RxPDO3	Dynamic
4th receive PDO mapping (1603_h)	RxPDO4	Dynamic
1st transmit PDO mapping ($1A00_h$)	TxPDO1	Dynamic
2nd transmit PDO mapping ($1A01_h$)	TxPDO2	Dynamic
3rd transmit PDO mapping ($1A02_h$)	TxPDO3	Dynamic
4th transmit PDO mapping ($1A03_h$)	TxPDO4	Dynamic

Structure of the Entries

Up to 10 parameters can be mapped in a PDO. Each communication object for setting the PDO mapping provides four subindex entries. A subindex entry contains three pieces of information on the object: the index, the subindex, and the number of bits that the object uses in the PDO.

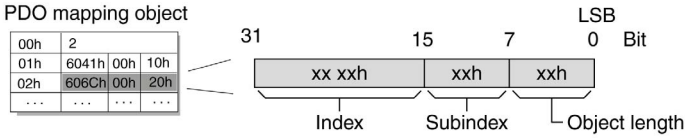

Subindex 00_h of the communication object contains the number of valid subindex entries.

Object length	Bit value
08_h	8 bits
10_h	16 bits
20_h	32 bits

Chapter 22
EtherCAT Object Dictionary

What Is in This Chapter?

This chapter contains the following sections:

Section	Topic	Page
22.1	Overview	344
22.2	1000_h…$1FFF_h$ Standard Communication Object Group	348
22.3	4000_h … $4FFF_h$ Vendor-specific Object Group	358
22.4	6000_h … $6FFF_h$ Device-Specific Object Group	380

Section 22.1
Overview

What Is in This Section?

This section contains the following topics:

Topic	Page
Specifications for the Objects	345
Object Dictionary Overview	347

Specifications for the Objects

Overview

The object dictionary table contains the following information:

Index	Name	Object type Data type Access	PDO mapping object	Minimum value Factory setting Maximum value

The symbol **(-)** means that the value is not significant.

Index

The index specifies the position of the object in the object dictionary. The index value is specified as a hexadecimal value. The subindex is also available in this cell if it is relevant

Name

Name of the object.

Object Type

The object type specifies the data structure of the object:

Object type	Description	DS306 Coding
VAR	A simple value, for example of the type Integer8, Unsigned32 or Visible String8.	7_h
ARRAY	A data field in which the entries have the same data type.	8_h
RECORD	A data field that contains entries that are a combination of simple data types.	9_h

Data Type

The data type specifies the type of the object:

Data type	Description	Value range	Data length	DS301 coding
BOOL	Boolean	0 = false, 1 = true	1 byte	0001_h
INT8	Integer 8 bits	-128 ... +127	1 byte	0002_h
INT16	Integer 16 bits	-32768 ... +32767	2 bytes	0003_h
INT32	Integer 32 bits	-2147483648 ... 2147483647	4 bytes	0004_h
UINT8	Unsigned Integer 8 bits	0 ... 255	1 byte	0005_h
UINT16	Unsigned Integer 16 bits	0 ... 65535	2 bytes	0006_h
UINT32	Unsigned Integer 32 bits	0 ... 4294967295	4 bytes	0007_h
VISIBLE_STRING	Visible String 8 bytes	ASCII characters	8 bytes	0009_h

Access

Indicates the access type for the object:

Access type	Description
ro	Read only
rw	Read and write
rww	Read and write on process output
const	Constant value

PDO Mapping Object

Indicates if the object can be mapped in a PDO:

PDO mapping object	Description
No	The object cannot be mapped in a PDO
Yes	The object can be mapped in a PDO

Minimum Value

The minimum value which can be set.

Factory Setting

The value of the object when the product is shipped from the factory.

Maximum Value

The maximum value which can be set.

Object Dictionary Overview

Description

Each EtherCAT device manages an object dictionary which contains the objects for communication.

Index and Subindex

The objects are addressed in the object dictionary via a 16 bits index.

One or more 8 bits subindex entries for each object specify individual data fields in the object. Index and subindex are shown in hexadecimal notation.

Description Object Dictionary

The description object dictionary is made of several object groups:

Index (hex)	Object
0000	Unused
0001…001F	Static data types
0020…003F	Complex data types
0040…005F	Unused (Manufacturer-specific complex data types)
0060…007F	Device profile-specific static data types
0080…009F	Device profile-specific complex data types
00A0…0FFF	Reserved
1000…1FFF	Communication profile area
2000…5FFF	Vendor-specific profile area
6000…9FFF	Standardized device profile area
A000…FFFF	Reserved

Object Groups Implemented

Three groups of objects are available in the object dictionary.

- 1000_h - $1FFF_h$: Standard communication Object Group *(see page 348)*
- 4000_h - $4FFF_h$: Vendor-specific Object Group *(see page 358)*
- 6000_h - $6FFF_h$: Device profile Object Group *(see page 380)*

Section 22.2
1000_h…$1FFF_h$ Standard Communication Object Group

What Is in This Section?

This section contains the following topics:

Topic	Page
$10xx_h$ Object Group	349
$16xx_h$ Object Group	351
$1Axx_h$ Object Group	354
$1Cxx_h$ Object Group	357

$10xx_h$ Object Group

$10xx_h$ Standard Communication Object Group

Index	Name	Object type Data type Access	PDO mapping object	Minimum value Factory setting Maximum value
1000_h	Device Type	VAR UINT32 ro	No	- 4325778 -
1001_h	Error Register	VAR UINT8 ro	No	- - -
1003_h	Pre-defined Error Field History of the errors detected by the drive and notified via the Emergency Object.	ARRAY - -	No	- - -
$1003:0_h$	Number of Errors The history of error codes can be cleared by writing value 0 to this sub index.	VAR UINT8 rw	No	- 0 -
$1003:1_h$	Standard Error Field Error code of most recent detected error n	VAR UINT32 ro	No	- - -
$1003:2_h$	Standard Error Field Error code of most recent detected error n-1	VAR UINT32 ro	No	- - -
$1003:3_h$	Standard Error Field Error code of most recent detected error n-2	VAR UINT32 ro	No	- - -
$1003:4_h$	Standard Error Field Error code of most recent detected error n-3	VAR UINT32 ro	No	- - -
$1003:5_h$	Standard Error Field Error code of most recent detected error n-4	VAR UINT32 ro	No	- - -
$1003:6_h$	Standard Error Field Error code of most recent detected error n-5	VAR UINT32 ro	No	- - -
$1003:7_h$	Standard Error Field Error code of most recent detected error n-6	VAR UINT32 ro	No	- - -
$1003:8_h$	Standard Error Field Error code of most recent detected error n-7	VAR UINT32 ro	No	- - -
$1003:9_h$	Standard Error Field Error code of most recent detected error n-8	VAR UINT32 ro	No	- - -
$1003:A_h$	Standard Error Field Error code of most recent detected error n-9	VAR UINT32 ro	No	- - -
1018_h	Identity Object	RECORD - -	No	- - -
$1018:0_h$	number of entries	VAR UINT8 ro	No	1 4 4
$1018:1_h$	Vendor ID	VAR UINT32 ro	No	- 134217818 -
$1018:2_h$	Product Code	VAR UINT32 ro	No	- 614416 -

Index	Name	Object type Data type Access	PDO mapping object	Minimum value Factory setting Maximum value
$1018{:}3_h$	Revision number	VAR UINT32 ro	No	- - -
$1018{:}4_h$	Serial number	VAR UINT32 ro	No	- - -

$16xx_h$ Object Group

$16xx_h$ Standard Communication Object Group

Index	Name	Object type Data type Access	PDO mapping object	Minimum value Factory setting Maximum value
1600_h	Receive PDO Mapping Parameter 1	RECORD - -	No	- - -
$1600:0_h$	Number of Entries	VAR UINT8 rw	No	0 3 10
$1600:1_h$	Mapping Entry 1	VAR UINT32 rw	No	0 1614807056 4294967295
$1600:2_h$	Mapping Entry 2	VAR UINT32 rw	No	0 1618608160 4294967295
$1600:3_h$	Mapping Entry 3	VAR UINT32 rw	No	0 1627259168 4294967295
$1600:4_h$	Mapping Entry 4	VAR UINT32 rw	No	0 0 4294967295
$1600:5_h$	Mapping Entry 5	VAR UINT32 rw	No	0 0 4294967295
$1600:6_h$	Mapping Entry 6	VAR UINT32 rw	No	0 0 4294967295
$1600:7_h$	Mapping Entry 7	VAR UINT32 rw	No	0 0 4294967295
$1600:8_h$	Mapping Entry 8	VAR UINT32 rw	No	0 0 4294967295
$1600:9_h$	Mapping Entry 9	VAR UINT32 rw	No	0 0 4294967295
$1600:10_h$	Mapping Entry 10	VAR UINT32 rw	No	0 0 4294967295
1601_h	Receive PDO Mapping Parameter 2	RECORD - -	No	- - -
$1601:0_h$	Number of Entries	VAR UINT8 rw	No	0 3 10
$1601:1_h$	Mapping Entry 1	VAR UINT32 rw	No	0 1614807056 4294967295
$1601:2_h$	Mapping Entry 2	VAR UINT32 rw	No	0 1618608160 4294967295
$1601:3_h$	Mapping Entry 3	VAR UINT32 rw	No	0 0 4294967295
$1601:4_h$	Mapping Entry 4	VAR UINT32 rw	No	0 0 4294967295

Index	Name	Object type Data type Access	PDO mapping object	Minimum value Factory setting Maximum value
$1601:5_h$	Mapping Entry 5	VAR UINT32 rw	No	0 0 4294967295
$1601:6_h$	Mapping Entry 6	VAR UINT32 rw	No	0 0 4294967295
$1601:7_h$	Mapping Entry 7	VAR UINT32 rw	No	0 0 4294967295
$1601:8_h$	Mapping Entry 8	VAR UINT32 rw	No	0 0 4294967295
$1601:9_h$	Mapping Entry 9	VAR UINT32 rw	No	0 0 4294967295
$1601:10_h$	Mapping Entry 10	VAR UINT32 rw	No	0 0 4294967295
1602_h	Receive PDO Mapping Parameter 3	RECORD - -	No	- - -
$1602:0_h$	Number of Entries	VAR UINT8 rw	No	0 3 10
$1602:1_h$	Mapping Entry 1	VAR UINT32 rw	No	0 1614807056 4294967295
$1602:2_h$	Mapping Entry 2	VAR UINT32 rw	No	0 1627324448 4294967295
$1602:3_h$	Mapping Entry 3	VAR UINT32 rw	No	0 0 4294967295
$1602:4_h$	Mapping Entry 4	VAR UINT32 rw	No	0 0 4294967295
$1602:5_h$	Mapping Entry 5	VAR UINT32 rw	No	0 0 4294967295
$1602:6_h$	Mapping Entry 6	VAR UINT32 rw	No	0 0 4294967295
$1602:7_h$	Mapping Entry 7	VAR UINT32 rw	No	0 0 4294967295
$1602:8_h$	Mapping Entry 8	VAR UINT32 rw	No	0 0 4294967295
$1602:9_h$	Mapping Entry 9	VAR UINT32 rw	No	0 0 4294967295
$1602:10_h$	Mapping Entry 10	VAR UINT32 rw	No	0 0 4294967295
1603_h	Receive PDO Mapping Parameter 4	RECORD - -	No	- - -
$1603:0_h$	Number of Entries	VAR UINT8 rw	No	0 6 10

Index	Name	Object type Data type Access	PDO mapping object	Minimum value Factory setting Maximum value
$1603{:}1_h$	Mapping Entry 1	VAR UINT32 rw	No	0 0 4294967295
$1603{:}2_h$	Mapping Entry 2	VAR UINT32 rw	No	0 0 4294967295
$1603{:}3_h$	Mapping Entry 3	VAR UINT32 rw	No	0 0 4294967295
$1603{:}4_h$	Mapping Entry 4	VAR UINT32 rw	No	0 0 4294967295
$1603{:}5_h$	Mapping Entry 5	VAR UINT32 rw	No	0 0 4294967295
$1603{:}6_h$	Mapping Entry 6	VAR UINT32 rw	No	0 0 4294967295
$1603{:}7_h$	Mapping Entry 7	VAR UINT32 rw	No	0 0 4294967295
$1603{:}8_h$	Mapping Entry 8	VAR UINT32 rw	No	0 0 4294967295
$1603{:}9_h$	Mapping Entry 9	VAR UINT32 rw	No	0 0 4294967295
$1603{:}10_h$	Mapping Entry 10	VAR UINT32 rw	No	0 0 4294967295

$1Axx_h$ Object Group

$1Axx_h$ Standard Communication Object Group

Index	Name	Object type Data type Access	PDO mapping object	Minimum value Factory setting Maximum value
$1A00_h$	Transmit PDO Mapping Parameter 1	RECORD - -	No	- - -
$1A00:0_h$	Number of Entries	VAR UINT8 rw	No	0 4 10
$1A00:1_h$	Mapping Entry 1	VAR UINT32 rw	No	0 1614872592 4294967295
$1A00:2_h$	Mapping Entry 2	VAR UINT32 rw	No	0 0 4294967295
$1A00:3_h$	Mapping Entry 3	VAR UINT32 rw	No	0 0 4294967295
$1A00:4_h$	Mapping Entry 4	VAR UINT32 rw	No	0 0 4294967295
$1A00:5_h$	Mapping Entry 5	VAR UINT32 rw	No	0 0 4294967295
$1A00:6_h$	Mapping Entry 6	VAR UINT32 rw	No	0 0 4294967295
$1A00:7_h$	Mapping Entry 7	VAR UINT32 rw	No	0 0 4294967295
$1A00:8_h$	Mapping Entry 8	VAR UINT32 rw	No	0 0 4294967295
$1A00:9_h$	Mapping Entry 9	VAR UINT32 rw	No	0 0 4294967295
$1A00:10_h$	Mapping Entry 10	VAR UINT32 rw	No	0 0 4294967295
$1A01_h$	Transmit PDO Mapping Parameter 2	RECORD - -	No	- - -
$1A01:0_h$	Number of Entries	VAR UINT8 rw	No	0 4 10
$1A01:1_h$	Mapping Entry 1	VAR UINT32 rw	No	0 1614872592 4294967295
$1A01:2_h$	Mapping Entry 2	VAR UINT32 rw	No	0 1617166368 4294967295
$1A01:3_h$	Mapping Entry 3	VAR UINT32 rw	No	0 0 4294967295
$1A01:4_h$	Mapping Entry 4	VAR UINT32 rw	No	0 0 4294967295

Index	Name	Object type Data type Access	PDO mapping object	Minimum value Factory setting Maximum value
$1A01:5_h$	Mapping Entry 5	VAR UINT32 rw	No	0 0 4294967295
$1A01:6_h$	Mapping Entry 6	VAR UINT32 rw	No	0 0 4294967295
$1A01:7_h$	Mapping Entry 7	VAR UINT32 rw	No	0 0 4294967295
$1A01:8_h$	Mapping Entry 8	VAR UINT32 rw	No	0 0 4294967295
$1A01:9_h$	Mapping Entry 9	VAR UINT32 rw	No	0 0 4294967295
$1A01:10_h$	Mapping Entry 10	VAR UINT32 rw	No	0 0 4294967295
$1A02_h$	Transmit PDO Mapping Parameter 3	RECORD - -	No	- - -
$1A02:0_h$	Number of Entries	VAR UINT8 rw	No	0 5 10
$1A02:1_h$	Mapping Entry 1	VAR UINT32 rw	No	0 1614872592 4294967295
$1A02:2_h$	Mapping Entry 2	VAR UINT32 rw	No	0 1617690656 4294967295
$1A02:3_h$	Mapping Entry 3	VAR UINT32 rw	No	0 0 4294967295
$1A02:4_h$	Mapping Entry 4	VAR UINT32 rw	No	0 0 4294967295
$1A02:5_h$	Mapping Entry 5	VAR UINT32 rw	No	0 0 4294967295
$1A02:6_h$	Mapping Entry 6	VAR UINT32 rw	No	0 0 4294967295
$1A02:7_h$	Mapping Entry 7	VAR UINT32 rw	No	0 0 4294967295
$1A02:8_h$	Mapping Entry 8	VAR UINT32 rw	No	0 0 4294967295
$1A02:9_h$	Mapping Entry 9	VAR UINT32 rw	No	0 0 4294967295
$1A02:10_h$	Mapping Entry 10	VAR UINT32 rw	No	0 0 4294967295
$1A03_h$	Transmit PDO Mapping Parameter 4	RECORD - -	No	- - -
$1A03:0_h$	Number of Entries	VAR UINT8 rw	No	0 7 10

Index	Name	Object type Data type Access	PDO mapping object	Minimum value Factory setting Maximum value
$1A03:1_h$	Mapping Entry 1	VAR UINT32 rw	No	0 0 4294967295
$1A03:2_h$	Mapping Entry 2	VAR UINT32 rw	No	0 0 4294967295
$1A03:3_h$	Mapping Entry 3	VAR UINT32 rw	No	0 0 4294967295
$1A03:4_h$	Mapping Entry 4	VAR UINT32 rw	No	0 0 4294967295
$1A03:5_h$	Mapping Entry 5	VAR UINT32 rw	No	0 0 4294967295
$1A03:6_h$	Mapping Entry 6	VAR UINT32 rw	No	0 0 4294967295
$1A03:7_h$	Mapping Entry 7	VAR UINT32 rw	No	0 0 4294967295
$1A03:8_h$	Mapping Entry 8	VAR UINT32 rw	No	0 0 4294967295
$1A03:9_h$	Mapping Entry 9	VAR UINT32 rw	No	0 0 4294967295
$1A03:10_h$	Mapping Entry 10	VAR UINT32 rw	No	0 0 4294967295

1Cxx$_h$ Object Group

1Cxx$_h$ Standard Communication Object Group

Index	Name	Object type Data type Access	PDO mapping object	Minimum value Factory setting Maximum value
1C00$_h$	Sync Manager Communication Type	ARRAY - -	No	- - -
1C00:0$_h$	Number of Entries	VAR UINT8 rw	No	0 4 32
1C00:1$_h$	SubIndex 1	VAR UINT8 ro	No	0 1 4
1C00:2$_h$	SubIndex 2	VAR UINT8 ro	No	0 2 4
1C00:3$_h$	SubIndex 3	VAR UINT8 ro	No	0 3 4
1C00:4$_h$	SubIndex 4	VAR UINT8 ro	No	0 4 4
1C10$_h$	Sync Manager 0 PDO Assignment	ARRAY - -	No	- - -
1C10:0$_h$	Number of assigned PDOs	VAR UINT8 ro	No	0 0 0
1C11$_h$	Sync Manager 1 PDO Assignment	ARRAY - -	No	- - -
1C11:0$_h$	Number of Entries	VAR UINT8 ro	No	0 0 0
1C12$_h$	Sync Manager 2 PDO Assignment	ARRAY - -	No	- - -
1C12:0$_h$	Number of assigned RxPDO	VAR UINT8 rW	No	0 1 1
1C12:1$_h$	SubIndex 1	VAR UINT16 rw	No	5632 5632 6143
1C13$_h$	Sync Manager 3 PDO Assignment	ARRAY - -	No	- - -
1C13:0$_h$	Number of assigned TxPDOs	VAR UINT8 rW	No	0 1 1
1C13:1$_h$	SubIndex 1	VAR UINT16 rw	No	6656 6656 7167

Section 22.3
4000_h … $4FFF_h$ Vendor-specific Object Group

What Is in This Section?

This section contains the following topics:

Topic	Page
$40xx_h$ Object Group	359
$41xx_h$ Object Group	361
$42xx_h$ Object Group	365
$43xx_h$ Object Group	367
$44xx_h$ Object Group	368
$45xx_h$ Object Group	370
$48xx_h$ Object Group	372
$49xx_h$ Object Group	375
$4Bxx_h$ Object Group	377
$4Fxx_h$ Object Group	379

$40xx_h$ Object Group

$40xx_h$ Vendor-specific Object Group

This objects list is also available in P0 - Status parameters *(see page 221)*

Index	Name	Parameter	Object type Data type Access	PDO mapping object	Minimum value Factory setting Maximum value
4000_h	Firmware Version	P0-00	VAR UINT16 ro	No	0 - 65535
4001_h	Error code of detected error	P0-01	VAR UINT16 rw	No	0 - 65535
4002_h	Drive Status Displayed by HMI	P0-02	VAR UINT16 rw	No	0 0 123
4004_h	FPGA Version	P0-04	VAR UINT16 ro	No	0 - 65535
4008_h	Operating Hour Meter in Seconds	P0-08	VAR UINT32 ro	No	0 - 4294967295
4009_h	Status Value 1	P0-09	VAR INT32 ro	No	-2147483647 - 2147483647
$400A_h$	Status Value 2	P0-10	VAR INT32 ro	No	-2147483647 - 2147483647
$400B_h$	Status Value 3	P0-11	VAR INT32 ro	No	-2147483647 - 2147483647
$400C_h$	Status Value 4	P0-12	VAR INT32 ro	No	-2147483647 - 2147483647
$400D_h$	Status Value 5	P0-13	VAR INT32 ro	No	-2147483647 - 2147483647
4011_h	Indicate status value 1	P0-17	VAR UINT16 rw	No	0 0 123
4012_h	Indicate status value 2	P0-18	VAR UINT16 rw	No	0 0 123
4013_h	Indicate status value 3	P0-19	VAR UINT16 rw	No	0 0 123
4014_h	Indicate status value 4	P0-20	VAR UINT16 rw	No	0 0 123
4015_h	Indicate status value 5	P0-21	VAR UINT16 rw	No	0 0 123
4019_h	Parameter Mapping 1	P0-25	VAR UINT32 rw	No	0 - 4294967295
$401A_h$	Parameter Mapping 2	P0-26	VAR UINT32 rw	No	0 - 4294967295
$401B_h$	Parameter Mapping 3	P0-27	VAR UINT32 rw	No	0 - 4294967295

Index	Name	Parameter	Object type Data type Access	PDO mapping object	Minimum value Factory setting Maximum value
$401C_h$	Parameter Mapping 4	P0-28	VAR UINT32 rw	No	0 - 4294967295
$401D_h$	Parameter Mapping 5	P0-29	VAR UINT32 rw	No	0 - 4294967295
$401E_h$	Parameter Mapping 6	P0-30	VAR UINT32 rw	No	0 - 4294967295
$401F_h$	Parameter Mapping 7	P0-31	VAR UINT32 rw	No	0 - 4294967295
4020_h	Parameter Mapping 8	P0-32	VAR UINT32 rw	No	0 - 4294967295
4023_h	Block Data Read/Write P0-35…P0-42 1	P0-35	VAR UINT32 rw	No	0 0 4294967295
4024_h	Block Data Read/Write P0-35…P0-42 2	P0-36	VAR UINT32 rw	No	0 0 4294967295
4025_h	Block Data Read/Write P0-35…P0-42 3	P0-37	VAR UINT32 rw	No	0 0 4294967295
4026_h	Block Data Read/Write P0-35…P0-42 4	P0-38	VAR UINT32 rw	No	0 0 4294967295
4027_h	Block Data Read/Write P0-35…P0-42 5	P0-39	VAR UINT32 rw	No	0 0 4294967295
4028_h	Block Data Read/Write P0-35…P0-42 6	P0-40	VAR UINT32 rw	No	0 0 4294967295
4029_h	Block Data Read/Write P0-35…P0-42 7	P0-41	VAR UINT32 rw	No	0 0 4294967295
$402A_h$	Block Data Read/Write P0-35…P0-42 8	P0-42	VAR UINT32 rw	No	0 0 4294967295
$402E_h$	State of Signal Output Functions	P0-46	VAR UINT16 ro	No	0 - 65535
$402F_h$	Number of Last Alert	P0-47	VAR UINT16 ro	No	0 - 65535

41xx$_h$ Object Group

41xx$_h$ Vendor-specific Object Group

This objects list is also available in P1 - Basic parameters *(see page 226)*

Index	Name	Parameter	Object type Data type Access	PDO mapping object	Minimum value Factory setting Maximum value
4101$_h$	Operating Mode and Direction of Rotation	P1-01	VAR UINT16 rw	No	32 153 4505
4102$_h$	Velocity and Torque Limitations Activation/Deactivation	P1-02	VAR UINT16 rw	No	0 0 17
4103$_h$	Polarity of Pulse Outputs	P1-03	VAR UINT16 rw	No	0 0 16
4106$_h$	EtherCAT Opmode	P1-06	VAR INT16 ro	No	-32768 0 32767
4107$_h$	Limit Switch Fault Reaction	P1-07	VAR UINT16 rw	No	0 1 1
4109$_h$	Velocity Limitation 1	P1-09	VAR INT32 rw	No	-60000 10000 60000
410A$_h$	Velocity Limitation 2	P1-10	VAR INT32 rw	No	-60000 20000 60000
410B$_h$	Velocity Limitation 3	P1-11	VAR INT32 rw	No	-60000 30000 60000
410C$_h$	Torque Limitation 1	P1-12	VAR INT16 rw	No	-300 100 300
410D$_h$	Torque Limitation 2	P1-13	VAR INT16 rw	No	-300 100 300
410E$_h$	Torque Limitation 3	P1-14	VAR INT16 rw	No	-300 100 300
410F$_h$	Mains Phase Monitoring - Response to Missing Mains Phase	P1-15	VAR UINT16 rw	No	0 0 2
4110$_h$	Mains Phase Monitoring - Fault Reset	P1-16	VAR UINT16 rw	No	0 0 1
4111$_h$	Mains Phase Monitoring - Type	P1-17	VAR UINT16 rw	No	0 0 2
4113$_h$	Active Disable - Delay Time Power Stage	P1-19	VAR UINT16 rw	No	0 0 6500
4114$_h$	Current Limit During Quick Stop	P1-20	VAR INT16 rw	No	1 1000 1000
4115$_h$	Status of Foldback Current Drive	P1-21	VAR UINT16 ro	No	0 - 1
4116$_h$	Foldback Current Limit - Drive	P1-22	VAR UINT32 ro	No	0 - 30000

Index	Name	Parameter	Object type Data type Access	PDO mapping object	Minimum value Factory setting Maximum value
4117_h	Current Monitoring Drive - Detected Error Threshold Foldback Current	P1-23	VAR UINT32 rw	No	0 - 30000
4118_h	Current Monitoring Drive - Alert Threshold Foldback Current	P1-24	VAR UINT32 rw	No	0 - 30000
4119_h	Reserved	P1-25	VAR UINT32 rw	No	- - -
$411A_h$	Foldback Current Limit - Motor	P1-26	VAR UINT32 ro	No	0 - 30000
$411B_h$	Motor Current Monitoring - Detected Error Threshold Foldback Current	P1-27	VAR UINT32 rw	No	0 - 30000
$411C_h$	Motor Current Monitoring - Alert Threshold Foldback Current	P1-28	VAR UINT32 rw	No	0 - 30000
$411D_h$	DC Bus Overvoltage Monitoring - Threshold	P1-29	VAR UINT16 ro	No	- - -
$411E_h$	Commutation Monitoring - Maximum Counter Value	P1-30	VAR UINT16 rw	No	0 0 0
4120_h	Stop Method	P1-32	VAR UINT16 rw	No	0 0 32
4122_h	Acceleration Period	P1-34	VAR UINT16 rw	No	6 30 65500
4123_h	Deceleration Period	P1-35	VAR UINT16 rw	No	6 30 65500
4125_h	Ratio of Load Inertia to Motor Inertia	P1-37	VAR UINT32 rw	No	0 10 20000
4126_h	Signal Output Function ZSPD	P1-38	VAR INT32 rw	No	0 100 2000
4127_h	Signal Output Function TSPD - Velocity	P1-39	VAR UINT32 rw	No	0 3000 5000
$412A_h$	ON Delay Time of Holding Brake	P1-42	VAR UINT16 rw	No	0 0 1000
$412C_h$	Electronic Gear Ratio - Numerator 1	P1-44	VAR UINT32 rw	No	1 1 536870911
$412D_h$	Electronic Gear Ratio - Denominator	P1-45	VAR UINT32 rw	No	1 131072 2147483647
$412E_h$	Encoder Simulation Resolution	P1-46	VAR INT32 rw	No	- 2048 -
4134_h	Braking Resistor - Resistance	P1-52	VAR INT16 rw	No	-1 - 32767
4135_h	Braking Resistor - Power	P1-53	VAR INT16 rw	No	-1 - 32767

Index	Name	Parameter	Object type Data type Access	PDO mapping object	Minimum value Factory setting Maximum value
4136_h	Signal Output Function TPOS - Trigger Value	P1-54	VAR UINT32 rw	No	0 1311 1280000
4137_h	Maximum Velocity - User-Defined	P1-55	VAR UINT32 rw	No	10 - 6000
4139_h	Torque Monitoring - Torque Value	P1-57	VAR UINT16 rw	No	0 0 300
$413A_h$	Torque Monitoring - Time Value	P1-58	VAR UINT16 rw	No	1 1 1000
$413B_h$	S Curve Filter for Profile Velocity	P1-59	VAR UINT32 rw	No	0 0 255875
$413C_h$	Commutation Monitoring - Time Threshold	P1-60	VAR UINT16 rw	No	0 0 3000
$413D_h$	Commutation Monitoring - Velocity Threshold	P1-61	VAR UINT32 rw	No	0 600 60000
$413E_h$	Motor Overtemperature Monitoring - Response	P1-62	VAR UINT16 rw	No	0 0 5
$413F_h$	Motor Overtemperature Monitoring - Delay Time	P1-63	VAR UINT16 rw	No	0 30 300
4140_h	Undervoltage Monitoring - Response	P1-64	VAR UINT16 rw	No	0 0 3
4142_h	Status of Foldback Current Motor	P1-66	VAR UINT16 ro	No	0 - 1
4143_h	Undervoltage Monitoring - Delay Time	P1-67	VAR UINT16 rw	No	0 30 300
4144_h	Active Disable - Deceleration Ramp	P1-68	VAR UINT16 rw	No	6 30 65500
4145_h	Disable - Deceleration Time	P1-69	VAR UINT16 rw	No	0 0 6500
4147_h	Braking Resistor - Maximum Time in Braking	P1-71	VAR UINT16 rw	No	10 40 100
4148_h	Braking Resistor Overload Monitoring - Response	P1-72	VAR UINT16 rw	No	0 0 1
$414E_h$	User-Defined Maximum Current	P1-78	VAR UINT32 rw	No	- - -
$414F_h$	Maximum Current	P1-79	VAR UINT32 ro	No	- - -
4150_h	Maximum Peak Current	P1-80	VAR UINT32 ro	No	- - -
4151_h	Nominal Current	P1-81	VAR UINT32 ro	No	- - -

Index	Name	Parameter	Object type Data type Access	PDO mapping object	Minimum value Factory setting Maximum value
4152_h	Velocity limitation for operating mode Profile Torque	P1-82	VAR UINT16 rw	No	0 0 3
4154_h	Configured motor type	P1-84	VAR UINT32 rw	No	0 - 2147483647
4155_h	Torque Limit For Fieldbus Modes	P1-85	VAR UINT16 rw	No	0 0 3
4157_h	Quick Stop - Maximum Current	P1-87	VAR UINT32 rw	No	- 0 P1-79

$42xx_h$ Object Group

$42xx_h$ Vendor-specific Object Group

This objects list is also available in P2 - Extended parameters *(see page 235)*

Index	Name	Parameter	Object type Data type Access	PDO mapping object	Minimum value Factory setting Maximum value
4201_h	Gain Switching - Rate for Position Loop	P2-01	VAR UINT16 rw	No	10 100 500
4205_h	Gain Switching - Rate for Velocity Loop	P2-05	VAR UINT16 rw	No	10 100 500
4208_h	Factory Reset / Save Parameters / Activation of Forcing of Outputs	P2-08	VAR UINT16 rw	No	0 0 406
4209_h	Debounce Time - Inputs	P2-09	VAR UINT16 rw	No	0 2 20
$420A_h$	Signal Input Function for DI1	P2-10	VAR UINT16 rw	No	0 256 326
$420B_h$	Signal Input Function for DI2	P2-11	VAR UINT16 rw	No	0 256 326
$420C_h$	Signal Input Function for DI3	P2-12	VAR UINT16 rw	No	0 256 326
$420D_h$	Signal Input Function for DI4	P2-13	VAR UINT16 rw	No	0 256 326
$420E_h$	Signal Input Function for DI5	P2-14	VAR UINT16 rw	No	0 36 326
$420F_h$	Signal Input Function for DI6	P2-15	VAR UINT16 rw	No	0 34 326
4210_h	Signal Input Function for DI7	P2-16	VAR UINT16 rw	No	0 35 326
4211_h	Signal Input Function for DI8	P2-17	VAR UINT16 rw	No	0 33 326
4212_h	Signal Output Function for DO1	P2-18	VAR UINT16 rw	No	0 257 311
4213_h	Signal Output Function for DO2	P2-19	VAR UINT16 rw	No	0 256 311
4214_h	Signal Output Function for DO3	P2-20	VAR UINT16 rw	No	0 256 311
4215_h	Signal Output Function for DO4	P2-21	VAR UINT16 rw	No	0 256 311
4217_h	Signal Output Function for OCZ	P2-23	VAR UINT16 rw	No	0 64 311
4218_h	Debounce Time - Fast Inputs	P2-24	VAR UINT16 rw	No	0 50 100

Index	Name	Parameter	Object type Data type Access	PDO mapping object	Minimum value Factory setting Maximum value
$421B_h$	Gain Switching - Conditions and Type	P2-27	VAR UINT16 rw	No	0 0 24
$421D_h$	Gain Switching - Comparison Value	P2-29	VAR UINT32 rw	No	0 1280000 3840000
$421E_h$	Auxiliary Functions	P2-30	VAR INT16 rw	No	-8 0 8
$421F_h$	Autotuning Optimization Value Threshold	P2-31	VAR UINT32 rw	No	100 1000 10000
4220_h	Autotuning	P2-32	VAR UINT16 rw	No	0 0 56
4222_h	Velocity Monitoring - Threshold Value	P2-34	VAR UINT32 rw	No	0 50000 60000
4223_h	Position Deviation Monitoring - Threshold Value	P2-35	VAR UINT32 rw	No	1 100000 12800000
4241_h	Special Function 1	P2-65	VAR UINT16 rw	No	0 512 65472
4242_h	Special Function 2	P2-66	VAR UINT16 rw	No	0 0 4
4244_h	Auto-Enable and Automatic Hardware Limit Switch Fault Reset	P2-68	VAR UINT16 rw	No	0 256 273

$43xx_h$ Object Group

$43xx_h$ Vendor-specific Object Group

Part of this objects list is also available in P3 - Communication parameters *(see page 241)*

Index	Name	Parameter	Object type Data type Access	PDO mapping object	Minimum value Factory setting Maximum value
4300_h	Device Address Modbus	P3-00	VAR UINT16 rw	No	1 127 247
4301_h	Transmission Rate for Integrated Fieldbus and Modbus	P3-01	VAR UINT16 rw	No	0 2 5
4302_h	Modbus Connection Settings	P3-02	VAR UINT16 rw	No	6 7 9
4303_h	Detected Modbus Communication Errors - Handling	P3-03	VAR UINT16 rw	No	0 0 1
4304_h	Modbus Connection Monitoring	P3-04	VAR UINT16 rw	No	0 0 20000
4305_h	Device Address Integrated Fieldbus	P3-05	VAR UINT16 rw	No	0 0 127
4306_h	Digital Inputs - Forcing Settings	P3-06	VAR UINT16 rw	No	0 0 2047
4307_h	Modbus Response Delay Time	P3-07	VAR UINT16 rw	No	0 0 1000
4308_h	Fieldbus Protocol	P3-08	VAR UINT16 rw	No	0 0 3
$431E_h$	Internal Limit for Bit 11 `DriveCom Status Word` 6041_h	P3-30	VAR UINT16 rw	No	0 0 11
$431F_h$	Settings for ESM operating state Quick Stop	P3-31	VAR INT16 rw	No	-2 -1 7
4320_h	Automatic operating state transition from Switch On Disabled to Ready To Switch On	P3-32	VAR UINT16 rw	No	0 0 1
4328_h	Velocity Gearing Window	-	VAR UINT32 rw	No	0 2100000 4294967295

$44xx_h$ Object Group

$44xx_h$ Vendor-specific Object Group

Part of this objects list is also available in P4 - Diagnostics parameters *(see page 243)*

Index	Name	Parameter	Object type Data type Access	PDO mapping object	Minimum value Factory setting Maximum value
4400_h	Error History - Error Number of the Most Recently Detected Error n	P4-00	VAR UINT16 rw	No	0 - 65535
4401_h	Error History - Error Number of the Most Recently Detected Error n - 1	P4-01	VAR UINT16 ro	No	0 - 65535
4402_h	Error History -Error Number of the Most Recently Detected Error n - 2	P4-02	VAR UINT16 ro	No	0 - 65535
4403_h	Error History - Error Number of the Most Recently Detected Error n - 3	P4-03	VAR UINT16 ro	No	0 - 65535
4404_h	Error History - Error Number of the Most Recently Detected Error n - 4	P4-04	VAR UINT16 ro	No	0 - 65535
4405_h	Jog Velocity	P4-05	VAR UINT32 rw	No	0 20 5000
4406_h	Forcing Matrix of Digital Outputs	P4-06	VAR UINT16 rw	No	0 0 255
4407_h	State of Digital Inputs / Activate Forcing	P4-07	VAR UINT16 rw	No	0 - 255
4408_h	Status of HMI Keypad	P4-08	VAR UINT16 ro	No	0 0 255
4409_h	State of Digital Outputs	P4-09	VAR UINT16 ro	No	0 - 63
$440A_h$	Clear Error History	P4-10	VAR UINT16 rw	No	0 0 0
4418_h	Undervoltage Monitoring - Threshold Value	P4-24	VAR UINT16 rw	No	140 160 190
4419_h	Safety Function STO - Status	P4-25	VAR UINT16 ro	Yes	0 - 1
$441A_h$	Forceable digital outputs	P4-26	VAR UINT16 ro	No	15 15 15
$441B_h$	Digital output force mask	P4-27	VAR UINT16 rw	No	0 0 15
$441C_h$	Digital output force value	P4-28	VAR UINT16 rw	No	0 0 15
$441D_h$	Motor Load Period Time	P4-29	VAR UINT32 rw	No	1 5000 100000
4450_h	Jog Speed Fast	-	VAR UINT32 rw	No	0 426674 4294967295

Index	Name	Parameter	Object type Data type Access	PDO mapping object	Minimum value Factory setting Maximum value
4451_h	Jog Time	-	VAR UINT32 rw	No	0 0 4294967295
4452_h	Jog Step	-	VAR UINT32 rw	No	0 0 2147483647
4453_h	Jog Method	-	VAR UINT16 rw	No	0 0 65535
4454_h	Jog Speed Slow	-	VAR UINT32 rw	No	0 426674 4294967295

$45xx_h$ Object Group

$45xx_h$ Vendor-specific Object Group

This objects list is also available in P5 - Motion settings parameters *(see page 246)*

Index	Name	Parameter	Object type Data type Access	PDO mapping object	Minimum value Factory setting Maximum value
4500_h	Firmware Revision	P5-00	VAR UINT16 ro	No	0 - 65535
4508_h	Positive Software Limit Switch - Position	P5-08	VAR INT32 rw	No	-2147483647 134217727 2147483647
4509_h	Negative Software Limit Switch - Position	P5-09	VAR INT32 rw	No	-2147483647 -134217727 2147483647
$450B_h$	Software Limit Switches - Hysteresis Value	P5-11	VAR UINT16 rw	No	0 3556 35555
$450C_h$	Touch Probe Input 1 - Stable Level Duration	P5-12	VAR UINT16 rw	No	2 5 32
$450D_h$	Software Limit Switches - Activation	P5-13	VAR UINT16 rw	No	0 0 1
$450E_h$	Motion Profile for Torque - Slope	P5-14	VAR UINT32 rw	No	1 100000 30000000
$450F_h$	Motion Profile for Torque - Activation	P5-15	VAR UINT16 rw	No	0 0 1
4510_h	Encoder Increments in PUU	P5-16	VAR INT32 rw	No	-2147483647 0 2147483647
4515_h	Deceleration Ramp - Detected Transmission Error	P5-21	VAR UINT16 rw	No	6 50 65500
4516_h	Deceleration Ramp - Position Overflow	P5-22	VAR UINT16 rw	No	6 30 65500
4517_h	Deceleration Ramp - Triggering of Negative Software Limit Switch	P5-23	VAR UINT16 rw	No	6 50 65500
4518_h	Deceleration Ramp - Triggering of Positive Software Limit Switch	P5-24	VAR UINT16 rw	No	6 50 65500
4519_h	Deceleration Ramp - Triggering of Negative Hardware Limit Switch	P5-25	VAR UINT16 rw	No	6 30 65500
$451A_h$	Deceleration Ramp - Triggering of Positive Hardware Limit Switch	P5-26	VAR UINT16 rw	No	6 30 65500
4523_h	Touch Probes Polarity	P5-35	VAR UINT16 ro	Yes	0 - 3
4524_h	Touch Probe Input 1 - Captured Position EtherCAT Units	P5-36	VAR INT32 ro	No	-2147483647 0 2147483647
4525_h	Touch Probe Input 1 - Captured Position	P5-37	VAR INT32 ro	No	-2147483647 0 2147483647

Index	Name	Parameter	Object type Data type Access	PDO mapping object	Minimum value Factory setting Maximum value
4526_h	Touch Probe Input 1 - Event Counter	P5-38	VAR UINT16 ro	Yes	0 0 65535
4527_h	Touch Probe Input 1 - Configuration	P5-39	VAR UINT16 rw	No	0 0 257
4538_h	Touch Probe Input 2 - Captured Position EtherCAT Units	P5-56	VAR INT32 ro	No	-2147483647 0 2147483647
4539_h	Touch Probe Input 2 - Captured Position	P5-57	VAR INT32 ro	No	-2147483647 0 2147483647
$453A_h$	Touch Probe Input 2 - Event Counter	P5-58	VAR UINT16 ro	Yes	0 0 65535
$453B_h$	Touch Probe Input 2 - Configuration	P5-59	VAR UINT16 rw	No	0 0 257
$454C_h$	Move Offset When Homing	P5-76	VAR UINT16 rw	No	0 0 1
$454D_h$	Touch Probe Input 2 - Stable Level Duration	P5-77	VAR UINT16 rw	No	2 5 32

$48xx_h$ Object Group

$48xx_h$ Vendor-specific Object Group

This objects list is also available in P8 - Control loops parameters *(see page 250)*

Index	Name	Parameter	Object type Data type Access	PDO mapping object	Minimum value Factory setting Maximum value
4800_h	Derivative Gain	P8-00	VAR UINT32 rw	No	0 800 20000
4801_h	Integral Gain	P8-01	VAR UINT32 rw	No	0 100 2000
4802_h	Derivative-Integral Gain	P8-02	VAR UINT32 rw	No	0 400 4000
4803_h	Proportional Gain	P8-03	VAR UINT32 rw	No	0 300 4000
4804_h	Global Gain	P8-04	VAR UINT32 rw	No	100 500 3000
4805_h	LTN Spring Filter	P8-05	VAR UINT16 rw	No	10 7000 7000
4806_h	Anti-Vibration Gain	P8-06	VAR UINT32 rw	No	0 0 10000
4807_h	Pe filter	P8-07	VAR UINT32 rw	No	0 0 99000
4808_h	Anti-Vibration Filter	P8-08	VAR UINT32 rw	No	50 4000 4000
4809_h	Pe filter	P8-09	VAR UINT32 rw	No	50 4000 8000
$480A_h$	Ratio of Load Inertia to Motor Inertia for Anti-Vibration	P8-10	VAR UINT32 rw	No	0 0 6000
$480B_h$	NL Anti-Resonance Filter Divider	P8-11	VAR UINT32 rw	No	1 200 10000
$480C_h$	Anti-Resonance Sharpness	P8-12	VAR UINT16 rw	No	10 500 10000
$480D_h$	Pe Sharpness	P8-13	VAR UINT16 rw	No	10 500 10000
$480E_h$	Current Filter Damping	P8-14	VAR UINT16 rw	No	0 0 100
$480F_h$	Current Filter Low Pass Filter Rise Time	P8-15	VAR UINT16 rw	No	0 300 3000
4810_h	Current Filter - Second Notch Filter Bandwidth	P8-16	VAR UINT16 rw	No	0 0 500
4811_h	Current Filter - Second Notch Filter Center	P8-17	VAR UINT16 rw	No	5 100 1800

Index	Name	Parameter	Object type Data type Access	PDO mapping object	Minimum value Factory setting Maximum value
4812_h	Current Filter - Notch Filter Bandwidth	P8-18	VAR UINT16 rw	No	0 0 500
4813_h	Current Filter - Notch Filter Center	P8-19	VAR UINT16 rw	No	5 100 1800
4814_h	Elasticity Compensation	P8-20	VAR UINT32 rw	No	0 50000 50000
4815_h	Spring Deceleration Ratio	P8-21	VAR UINT16 rw	No	0 1000 2000
4820_h	S-Curve Setting for Profile Position	P8-32	VAR UINT32 rw	No	25 400 25600
4821_h	Low Pass Filter Setting for Profile Position	P8-33	VAR UINT32 rw	No	1 5000 500000
4822_h	Smoothing Filter for Profile Position	P8-34	VAR UINT16 rw	No	0 2 2
4823_h	Type of Velocity Control and Type of position Control	P8-35	VAR UINT16 rw	No	5 519 16385
4824_h	Pe filter 3	P8-36	VAR UINT32 rw	No	0 0 6000
4825_h	Pe filter 3	P8-37	VAR UINT32 rw	No	50 4000 8000
4826_h	Pe filter 3	P8-38	VAR UINT32 rw	No	200 1000 10000
4827_h	Gravity Compensation	P8-39	VAR INT16 rw	No	- 0 -
4828_h	LTN AFF	P8-40	VAR UINT16 rw	No	0 0 200
4829_h	Pe Sharpness	P8-41	VAR UINT16 rw	No	10 200 10000
$482A_h$	Homing Incorrect Information	P8-42	VAR UINT32 ro	No	0 - 4294967295
$482B_h$	ZSPD Low Pass Filter Value	P8-43	VAR UINT16 rw	No	10 1000 1000
$482C_h$	Send commands to multi turn encoder	P8-44	VAR UINT16 rw	No	0 - 2
$482D_h$	Feedback type	P8-45	VAR UINT16 ro	No	0 - 2
$482E_h$	Encoder temperature	P8-46	VAR INT16 ro	No	- - -
$482F_h$	Encoder firmware and hardware versions	P8-47	VAR UINT32 ro	No	0 - 4294967295

Index	Name	Parameter	Object type Data type Access	PDO mapping object	Minimum value Factory setting Maximum value
4830_h	Encoder active errors	P8-48	VAR UINT32 ro	No	0 - 4294967295
4831_h	Encoder active alerts	P8-49	VAR UINT32 ro	No	0 - 4294967295
4833_h	Speed Observer Mode	P8-51	VAR UINT16 rw	No	0 0 3
4835_h	Position Linear Controller Proportional Gain	P8-53	VAR UINT16 rw	No	0 300 12000
4836_h	Position Velocity Feedforward	P8-54	VAR INT32 rw	No	-2000 500 2000
4837_h	Position Acceleration Feedforward	P8-55	VAR INT32 rw	No	-20000 0 20000
4838_h	Position Acceleration Feedforward to Current Loop	P8-56	VAR INT32 rw	No	-20000 0 20000
4839_h	Velocity Proportional Gain	P8-57	VAR UINT32 rw	No	0 300 1000000000
$483A_h$	Velocity Integral Gain	P8-58	VAR UINT32 rw	No	0 30000 200000000
$483B_h$	Velocity Feedforward Ratio	P8-59	VAR UINT16 rw	No	0 900 1000
$483C_h$	Velocity Loop Output Filter Mode	P8-60	VAR UINT16 rw	No	0 2 3
$483D_h$	Velocity Loop Output Filter Parameter 1	P8-61	VAR UINT16 rw	No	1 500 10000
$483E_h$	Velocity Loop Output Filter Parameter 2	P8-62	VAR UINT16 rw	No	1 500 10000
$483F_h$	Velocity Filter Mode	P8-63	VAR UINT16 rw	No	0 1 2
4840_h	Velocity Filter Pole Frequency	P8-64	VAR UINT16 rw	No	20 440 2000
4841_h	Current Feedforward Low Pass Filter	P8-65	VAR UINT16 rw	No	10 1000 1000
4842_h	LTN Torque Filter Mode	P8-66	VAR UINT16 rw	No	0 0 1
4843_h	LTN Torque Filter Bandwidth	P8-67	VAR UINT16 rw	No	50 1000 2000
4844_h	Current Filter - Notch Filter Mode	P8-68	VAR UINT16 rw	No	0 0 1
4863_h	Adaptive Velocity Reference Value Gain	P8-99	VAR UINT32 rw	No	0 1000 3000

$49xx_h$ Object Group

$49xx_h$ Vendor-specific Object Group

Part of this objects list is also available in P9 - DTM data parameters *(see page 258)*

Index	Name	Parameter	Object type Data type Access	PDO mapping object	Minimum value Factory setting Maximum value
4900_h	Lexium program number	P9-00	VAR UINT32 ro	No	0 - 4294967295
4901_h	Firmware Version Date	P9-01	VAR UINT32 ro	No	0 - 4294967295
4902_h	MTP Identification Code	P9-02	VAR UINT16 ro	No	0 - 65535
4906_h	User-Defined Application Name 1	P9-06	VAR UINT32 rw	No	0 0 4294967295
4907_h	User-Defined Application Name 2	P9-07	VAR UINT32 rw	No	0 0 4294967295
4908_h	User-Defined Application Name 3	P9-08	VAR UINT32 rw	No	0 0 4294967295
4909_h	User-Defined Application Name 4	P9-09	VAR UINT32 rw	No	0 0 4294967295
$490A_h$	Modbus Word Order	P9-10	VAR UINT16 rw	No	0 0 1
$490B_h$	Serial Number Part 1	P9-11	VAR UINT32 ro	No	0 - 4294967295
$490C_h$	Serial Number Part 2	P9-12	VAR UINT32 ro	No	0 - 4294967295
$490D_h$	Serial Number Part 3	P9-13	VAR UINT32 ro	No	0 - 4294967295
$490E_h$	Serial Number Part 4	P9-14	VAR UINT32 ro	No	0 - 4294967295
$490F_h$	Autotuning Method	P9-15	VAR UINT16 rw	No	0 0 6
4910_h	Autotuning Motion Profile - Type	P9-16	VAR UINT16 rw	No	0 0 2
4911_h	Anti-vibration tuning mode.	P9-17	VAR UINT16 rw	No	0 0 6
4912_h	Autotuning Results - Save/Discard	P9-18	VAR UINT16 rw	No	0 0 3
4913_h	Autotuning - Elasticity Compensation Filters	P9-19	VAR INT16 rw	No	0 1 1
4914_h	Autotuning - Direction of Movement	P9-20	VAR INT16 rw	No	0 0 3

Index	Name	Parameter	Object type Data type Access	PDO mapping object	Minimum value Factory setting Maximum value
4915_h	Minimum Dwell Time for Detection of Movement Cycle	P9-21	VAR UINT16 rw	No	100 200 1000
4916_h	Autotuning - Automatic Estimation of Ratio of Load Inertia and Motor Inertia	P9-22	VAR UINT16 rw	No	0 0 1
4917_h	Defines which values will be used for the position command filters.	P9-23	VAR UINT16 rw	No	0 0 1
4919_h	Autotuning Motion Profile - Activation	P9-25	VAR UINT16 rw	No	0 0 1
$491A_h$	Autotuning - Movement Range in Direction1	P9-26	VAR INT32 rw	No	-2147483647 0 2147483647
$491B_h$	Autotuning - Movement Range in Direction2	P9-27	VAR INT32 rw	No	-2147483647 0 2147483647
$491C_h$	Autotuning Active	P9-28	VAR INT16 ro	No	0 - 1
$491D_h$	Autotuning - Velocity	P9-29	VAR UINT32 rw	No	- - -
$491E_h$	Autotuning - Status	P9-30	VAR UINT32 ro	No	0 - 65535
$491F_h$	Autotuning - Acceleration and Deceleration	P9-31	VAR UINT32 rw	No	6| 6 6000| 6000 65500| 65500
4920_h	Autotune advance mode.	P9-32	VAR UINT16 rw	No	0 1 2
4921_h	Maximum Autotuning Optimization Value	P9-33	VAR UINT32 ro	No	0 - 1000
4922_h	Autotuning Progress Bar	P9-34	VAR UINT16 ro	No	0 0 100
4923_h	Autotuning - Gravity Estimation	P9-35	VAR UINT16 rw	No	0 0 1
4924_h	Set LTNAFRC in Autotune	P9-36	VAR INT16 rw	No	0 0 2
4925_h	Autotuning - Last Stored Event	P9-37	VAR UINT32 ro	No	0 0 65535
4926_h	Mode 2 AT improvment	P9-38	VAR UINT16 ro	No	0 0 100
4927_h	Cycle Identification status	P9-39	VAR UINT16 ro	No	0 0 9
4928_h	LTN Autotuning Using Defaults	P9-40	VAR UINT16 rw	No	0 0 1

$4Bxx_h$ Object Group

$4Bxx_h$ Vendor-specific Object Group

Index	Name	Parameter	Object type Data type Access	PDO mapping object	Minimum value Factory setting Maximum value
$4B00_h$	Position	-	VAR INT32 ro	No	- - -
$4B01_h$	Target Position in PUU	-	VAR INT32 ro	No	- - -
$4B02_h$	Position Deviation in PUU	-	VAR INT32 ro	No	- - -
$4B03_h$	Actual Position in Pulses	-	VAR INT32 ro	No	- - -
$4B04_h$	Target Position in Pulses	-	VAR INT32 ro	No	- - -
$4B05_h$	Position Deviation in Pulses	-	VAR INT32 ro	No	- - -
$4B06_h$	Input Frequency	-	VAR INT32 ro	Yes	- - -
$4B07_h$	Actual Velocity in rpm	-	VAR INT32 ro	No	- - -
$4B09_h$	Target Velocity in rpm	-	VAR INT32 ro	No	- - -
$4B0B_h$	Target Torque in Percent of Nominal Current	-	VAR INT32 ro	No	- - -
$4B0E_h$	DC Bus Voltage	-	VAR INT32 ro	No	- - -
$4B0F_h$	Ratio of Load Inertia and Motor Inertia	-	VAR INT32 ro	No	- - -
$4B10_h$	Drive Temperature - Power Stage	-	VAR INT32 ro	No	- - -
$4B13_h$	Map P0-25	-	VAR INT32 ro	No	- - -
$4B14_h$	Map P0-26	-	VAR INT32 ro	No	- - -
$4B15_h$	Map P0-27	-	VAR INT32 ro	No	- - -
$4B16_h$	Map P0-28	-	VAR INT32 ro	No	- - -
$4B17_h$	Indicate P0-09	-	VAR INT32 ro	No	- - -

Index	Name	Parameter	Object type Data type Access	PDO mapping object	Minimum value Factory setting Maximum value
$4B18_h$	Indicate P0-10	-	VAR INT32 ro	No	- - -
$4B19_h$	Indicate P0-11	-	VAR INT32 ro	No	- - -
$4B1A_h$	Indicate P0-12	-	VAR INT32 ro	No	- - -
$4B1B_h$	Drive Temperature - Controller	-	VAR INT32 ro	No	- - -
$4B27_h$	Digital Inputs	-	VAR INT32 ro	No	- - -
$4B28_h$	Digital Outputs	-	VAR INT32 ro	No	- - -
$4B29_h$	Drive Status	-	VAR INT32 ro	Yes	- - -
$4B2A_h$	Operating Mode	-	VAR INT32 ro	No	- - -
$4B31_h$	External Encoder	-	VAR INT32 ro	No	- - -
$4B32_h$	Target Velocity in rpm	-	VAR INT32 ro	No	- - -
$4B35_h$	Target Torque	-	VAR INT32 ro	No	- - -
$4B36_h$	Actual Torque in Percent	-	VAR INT32 ro	No	- - -
$4B37_h$	Actual Torque in A	-	VAR INT32 ro	No	- - -
$4B3C_h$	Target Position Raw	-	VAR INT32 ro	No	- - -
$4B3D_h$	Position Deviation Raw in PUU	-	VAR INT32 ro	No	- - -
$4B3E_h$	Target Position Raw in Pulses	-	VAR INT32 ro	No	- - -
$4B3F_h$	Position Deviation Raw in Pulses	-	VAR INT32 ro	No	- - -
$4B4D_h$	Target Velocity	-	VAR INT32 ro	No	- - -

$4Fxx_h$ Object Group

$4Fxx_h$ Vendor-specific Object Group

Index	Name	Parameter	Object type Data type Access	PDO mapping object	Minimum value Factory setting Maximum value
$4FA0_h$	Drive Profile Lexium Control	-	RECORD - -	No	- - -
$4FA0:0_h$	NumOfEntries	-	VAR UINT8 ro	No	0 9 255
$4FA0:1_h$	ShiftRefA	-	VAR UINT16 ro	No	0 0 65535
$4FA0:2_h$	ModeError	-	VAR UINT16 ro	No	0 0 65535
$4FA0:3_h$	ModeErrorInfo	-	VAR UINT16 ro	No	0 0 65535
$4FA0:4_h$	Dpl_int_Lim	-	VAR UINT16 rw	No	0 0 65535
$4FA0:5_h$	Ds402intLim	-	VAR UINT16 rw	No	0 0 65535
$4FA0:6_h$	MON_V_Threshold	-	VAR UINT32 rw	No	0 0 4294967295
$4FA0:7_h$	MON_I_Threshold	-	VAR UINT16 rw	No	- - -
$4FA0:8_h$	DataError	-	VAR UINT16 ro	No	- - -
$4FA0:9_h$	DataErrorInfo	-	VAR UINT16 ro	No	- - -
$4FA3_h$	Save/Load Status	-	VAR UINT8 ro	No	0 0 255
$4FA4_h$	Commanded velocity	-	VAR INT32 ro	No	-2147483648 0 2147483647
$4FA6_h$	EtherCAT Manufacturer Specific SDO Abort Code	-	VAR UINT32 ro	No	0 - 4294967295

Section 22.4
6000_h … $6FFF_h$ Device-Specific Object Group

What Is in This Section?

This section contains the following topics:

Topic	Page
$60xx_h$ Object Group	381
$65xx_h$ Object Group	387

$60xx_h$ Object Group

$60xx_h$ Device-Specific Object Group

Index	Name	Object type Data type Access	PDO mapping object	Minimum value Factory setting Maximum value
$603F_h$	Error Code	VAR UINT16 ro	Yes	0 - 65535
6040_h	Controlword	VAR UINT16 rww	Yes	0 - 65535
6041_h	Statusword	VAR UINT16 ro	Yes	0 - 65535
$605D_h$	Halt Option Code	VAR INT16 rw	No	1 1 2
6060_h	Modes of Operation	VAR INT8 rw	Yes	-128 8 10
6061_h	Modes of Operation Display	VAR INT8 ro	Yes	-128 - 10
6062_h	Position Demand Value Unit: User-defined position unit	VAR INT32 ro	No	-2147483648 - 2147483647
6063_h	Position Actual Internal Value Unit: Increments	VAR INT32 ro	Yes	-2147483648 - 2147483647
6064_h	Position Actual Value Unit: User-defined position unit	VAR INT32 ro	Yes	-2147483648 - 2147483647
6065_h	Following Error Window Unit: User-defined position unit	VAR UINT32 rw	Yes	0 1280000 4294967295
6066_h	Following Error Time Out Unit: ms	VAR UINT16 rw	Yes	0 0 65535
6067_h	Position Window Unit: User-defined position unit	VAR UINT32 rw	Yes	0 163840 4294967295
6068_h	Position Window Time Unit: ms	VAR UINT16 rw	No	0 1 65535
$606B_h$	Velocity Demand Value Unit: User-defined position unit/s	VAR INT32 ro	No	-2147483648 - 2147483647
$606C_h$	Velocity Actual Value Unit: User-defined position unit/s	VAR INT32 ro	Yes	-2147483648 0 2147483647
$606E_h$	Velocity Window Time Unit: ms	VAR UINT16 rw	No	0 0 65535
6070_h	Velocity Threshold Time Unit: ms	VAR UINT16 rw	No	0 0 65535
6071_h	Target Torque Unit: 1/1000 of nominal torque	VAR INT16 rw	Yes	-32768 0 32767

Index	Name	Object type Data type Access	PDO mapping object	Minimum value Factory setting Maximum value
6073_h	Maximum Current Unit: 1/1000 of nominal current	VAR UINT16 rw	Yes	0 - 65535
6074_h	Torque Demand Value Unit: 1/1000 of nominal torque	VAR INT16 ro	Yes	-32768 - 32767
6075_h	Motor Rated Current Unit: mA	VAR UINT32 ro	No	0 - 150
6076_h	Motor Rated Torque Unit: mNm	VAR UINT32 rw	No	0 0 4294967295
6077_h	Torque Actual Value Unit: 1/1000 of nominal torque	VAR INT16 ro	Yes	-32768 - 32767
6078_h	Current Actual Value Unit: 1/1000 of nominal current	VAR INT16 ro	Yes	-32768 0 32767
6079_h	DC Link Circuit Voltage Unit: mV	VAR UINT32 ro	No	0 - 4294967295
$607A_h$	Target Position Unit: User-defined position unit	VAR INT32 rw	Yes	-2147483648 0 2147483647
$607C_h$	Home Offset Unit: User-defined position unit	VAR INT32 rw	No	-2147483648 0 2147483647
$607D_h$	Software Position Limit	RECORD - -	No	- - -
$607D:0_h$	Highest Subindex Supported	VAR UINT8 ro	No	2 2 2
$607D:1_h$	Minimum Software Position Limit Unit: User-defined position unit	VAR INT32 rw	No	-2147483648 -1717986906 2147483647
$607D:2_h$	Maximum Software Position Limit Unit: User-defined position unit	VAR INT32 rw	No	-2147483648 1717986906 2147483647
$607E_h$	Polarity	VAR UINT8 rw	No	0 0 192
$607F_h$	Maximum Profile Velocity Unit: User-defined position unit/s	VAR UINT32 rw	No	1 - 4294967295
6080_h	Maximum Motor Speed Unit: User-defined position unit/s	VAR UINT32 ro	No	0 0 4294967295
6081_h	Profile Velocity in profile position mode Unit: User-defined position unit/s	VAR UINT32 rw	Yes	0 0 4294967295
6083_h	Profile Acceleration Unit: User-defined position unit/s^2	VAR UINT32 rw	Yes	1 4266666667 4294967295
6084_h	Profile Deceleration Unit: User-defined position unit/s^2	VAR UINT32 rw	Yes	1 4266666667 4294967295
6085_h	Quick Stop Deceleration Unit: User-defined position unit/s^2	VAR UINT32 rw	No	1 4266666667 4294967295

Index	Name	Object type Data type Access	PDO mapping object	Minimum value Factory setting Maximum value
6087_h	Torque Slope Unit: 1/1000 of nominal torque/s	VAR UINT32 rw	Yes	1 - 30000000
$608F_h$	Position Encoder Resolution	ARRAY - -	No	- - -
$608F:0_h$	Highest subindex supported	VAR UINT8 ro	No	2 2 2
$608F:1_h$	Encoder Increments Unit: Increments	VAR UINT32 rw	No	16 1048576 10000000
$608F:2_h$	Motor Revolutions Unit: Revolutions	VAR UINT32 ro	No	1 1 4294967295
6091_h	Gear Ratio	RECORD - -	No	- - -
$6091:0_h$	Highest subindex supported	VAR UINT8 ro	No	2 2 2
$6091:1_h$	Motor Revolutions	VAR UINT32 rw	No	1 1 4294967295
$6091:2_h$	Shaft Revolutions	VAR UINT32 rw	No	1 1 4294967295
6092_h	Feed Constant User-defined position unit	RECORD - -	No	- - -
$6092:0_h$	Highest subindex supported	VAR UINT8 ro	No	2 2 2
$6092:1_h$	Feed	VAR UINT32 rw	No	1 131072 4294967295
$6092:2_h$	Shaft Revolutions	VAR UINT32 rw	No	1 1 4294967295
6098_h	Homing Method	VAR INT8 rw	No	1 2 35
6099_h	Homing Speeds	RECORD - -	No	- - -
$6099:0_h$	Highest subindex supported	VAR UINT8 ro	No	2 2 2
$6099:1_h$	Fast Homing Speed Unit: User-defined position unit/s	VAR UINT32 rw	No	1 2133332 4294967295
$6099:2_h$	Slow Homing Speed Unit: User-defined position unit/s	VAR UINT32 rw	No	1 426667 4294967295
$609A_h$	Homing Acceleration Unit: User-defined position unit/s^2	VAR UINT32 rw	No	1 640000000 4294967295
$60B0_h$	Position Offset Unit: User-defined position unit	VAR INT32 rw	No	-2147483648 0 2147483647

Index	Name	Object type Data type Access	PDO mapping object	Minimum value Factory setting Maximum value
$60B1_h$	Velocity Offset Unit: User-defined position unit/s	VAR INT32 rw	Yes	-2147483648 0 2147483647
$60B2_h$	Torque Offset Unit: 1/1000 of nominal torque	VAR INT16 rw	Yes	-32768 0 32767
$60B8_h$	Touch Probe Function	VAR UINT16 rw	Yes	0 - 65535
$60B9_h$	Touch Probe Status	VAR UINT16 ro	Yes	0 0 65535
$60BA_h$	Touch Probe 1 Position Positive Value Unit: User-defined position unit	VAR INT32 ro	Yes	-2147483648 0 2147483647
$60BB_h$	Touch Probe 1 Position Negative Value Unit: User-defined position unit	VAR INT32 ro	Yes	-2147483648 0 2147483647
$60BC_h$	Touch Probe 2 Position Positive Value Unit: User-defined position unit	VAR INT32 ro	Yes	-2147483648 - 2147483647
$60BD_h$	Touch Probe 2 Position Negative Value Unit: User-defined position unit	VAR INT32 ro	Yes	-2147483648 - 2147483647
$60C0_h$	Interpolation Sub Mode Select	VAR INT16 rw	No	0 0 2
$60C1_h$	Interpolation Data Record	RECORD - -	No	- - -
$60C1{:}0_h$	Highest subindex supported	VAR UINT8 ro	No	0 4 4
$60C1{:}1_h$	Data Record 1	VAR INT32 rw	Yes	-2147483648 - 2147483647
$60C1{:}2_h$	Data Record 2	VAR INT32 rw	Yes	-2147483648 - 2147483647
$60C1{:}3_h$	Data Record 3	VAR INT32 rw	Yes	-2147483648 - 2147483647
$60C1{:}4_h$	Data Record 4	VAR INT32 rw	Yes	-2147483648 - 2147483647
$60C2_h$	Interpolation Time Period	RECORD - -	No	- - -
$60C2{:}0_h$	Highest subindex supported	VAR UINT8 ro	No	2 2 2
$60C2{:}1_h$	Interpolation time period value Unit: $10^{(\text{interpolation time index})}$ seconds	VAR UINT8 rw	No	1 - 255
$60C2{:}2_h$	Interpolation time index	VAR INT8 rw	No	-128 -3 63
$60C4_h$	Interpolation Data Configuration	RECORD - -	No	- - -

Index	Name	Object type Data type Access	PDO mapping object	Minimum value Factory setting Maximum value
$60C4:0_h$	Highest subindex supported	VAR UINT8 ro	No	6 6 6
$60C4:1_h$	Maximum buffer size Unit: Number of data records	VAR UINT32 ro	No	1 1 1
$60C4:2_h$	Actual buffer size Unit: Number of data records	VAR UINT32 rw	No	1 - 1
$60C4:3_h$	Buffer organization	VAR UINT8 rw	No	0 0 1
$60C4:4_h$	Buffer position	VAR UINT16 rw	No	0 - 0
$60C4:5_h$	Size of data record Unit: Bytes	VAR UINT8 wo	No	4 - 4
$60C4:6_h$	Buffer clear	VAR UINT8 wo	No	0 - 1
$60C5_h$	Maximum Acceleration Unit: User-defined position unit/s^2	VAR UINT32 rw	No	1 4153464149 4294967295
$60C6_h$	Maximum Deceleration Unit: User-defined position unit/s^2	VAR UINT32 rw	No	1 4153464149 4294967295
$60D5_h$	Touch probe 1 positive edge counter	VAR UINT16 ro	Yes	0 - 65535
$60D6_h$	Touch probe 1 negative edge counter	VAR UINT16 ro	Yes	0 - 65535
$60D7_h$	Touch probe 2 positive edge counter	VAR UINT16 ro	Yes	0 - 65535
$60D8_h$	Touch probe 2 negative edge counter	VAR UINT16 ro	Yes	0 - 65535
$60F2_h$	Position option code	VAR UINT16 rw	No	0 0 65535
$60F4_h$	Following Error Actual Value Unit: User-defined position unit	VAR INT32 ro	Yes	-2147483648 - 2147483647
$60FC_h$	Position Demand Internal Value Unit: Increments	VAR INT32 ro	No	-2147483648 - 2147483647
$60FD_h$	Digital Inputs	VAR UINT32 ro	Yes	0 - 4294967295
$60FE_h$	Digital Outputs	ARRAY - -	No	- - -
$60FE:0_h$	Highest subindex supported	VAR UINT8 ro	No	2 2 2
$60FE:1_h$	Physical Outputs	VAR UINT32 rw	Yes	0 - 4294967295

Index	Name	Object type Data type Access	PDO mapping object	Minimum value Factory setting Maximum value
$60FE:2_h$	Output Mask	VAR UINT32 rw	No	0 - 4294967295
$60FF_h$	Target Velocity Unit: User-defined position unit/s	VAR INT32 rw	Yes	-2147483648 0 2147483647

$65xx_h$ Object Group

$65xx_h$ Device Profile Object Group

Index	Name	Object type Data type Access	PDO mapping object	Minimum value Factory setting Maximum value
6502_h	Supported Drive Modes	VAR UINT32 ro	No	237 - 237

Chapter 23
EtherCAT Hardware Setup

What Is in This Chapter?

This chapter contains the following topics:

Topic	Page
EtherCAT Connector Description (CN4)	390
Cable Routing Practices	391

EtherCAT Connector Description (CN4)

EtherCAT Dual Port/RJ45 Connector

The following figure shows the EtherCAT dual port/RJ45 connector on the device.

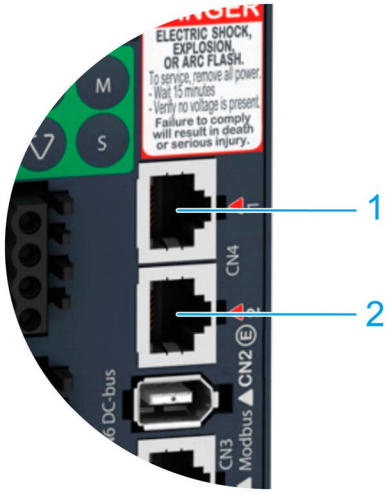

Item	Description
1	(**EtherCAT IN X1**) RJ45 connector
2	(**EtherCAT OUT X2**) RJ45 connector

Cable Routing Practices

Installation Topology

The OUT connector of the EtherCAT controller is connected to the IN (X1) connector of the drive.

Each OUT (X2) connector of a drive is connected to the IN (X1) connector of the next drive.

If this wiring rule is not respected, the network topology will not be discovered correctly by the EtherCAT controller.

Example of daisy chain topology

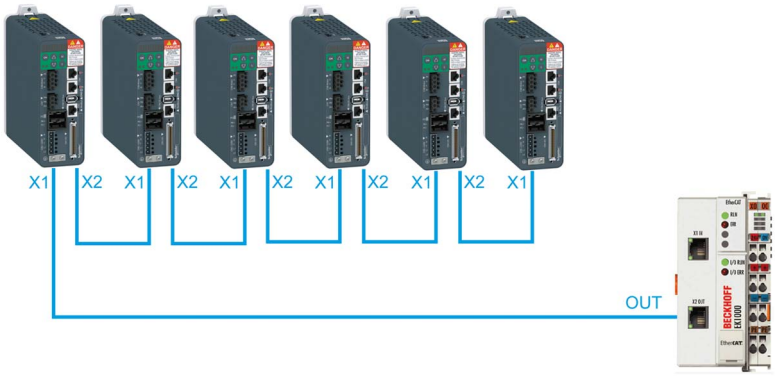

Example of ring topology

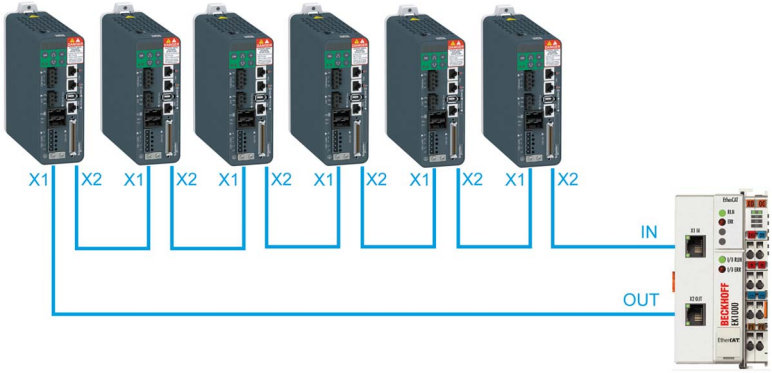

Chapter 24
EtherCAT Software Setup

Section 24.1
Software Setup with TwinCAT

What Is in This Section?

This section contains the following topics:

Topic	Page
TwinCAT Configuration	395
Setting the Process Data	399

TwinCAT Configuration

Overview

Here is an example of an application that demonstrates how to configure a third-party controller equipped with an EtherCAT port using the TwinCAT software.

This example has been done with TwinCAT software version 3.1 in English.

NOTE: The screenshots or procedure in this example may change with a newer TwinCAT software version. The ESI file must be integrated into the system of the controller.

Creating a Project

Click **New TwinCAT Project** and select **TwinCAT XAT Project (XML Format)**.

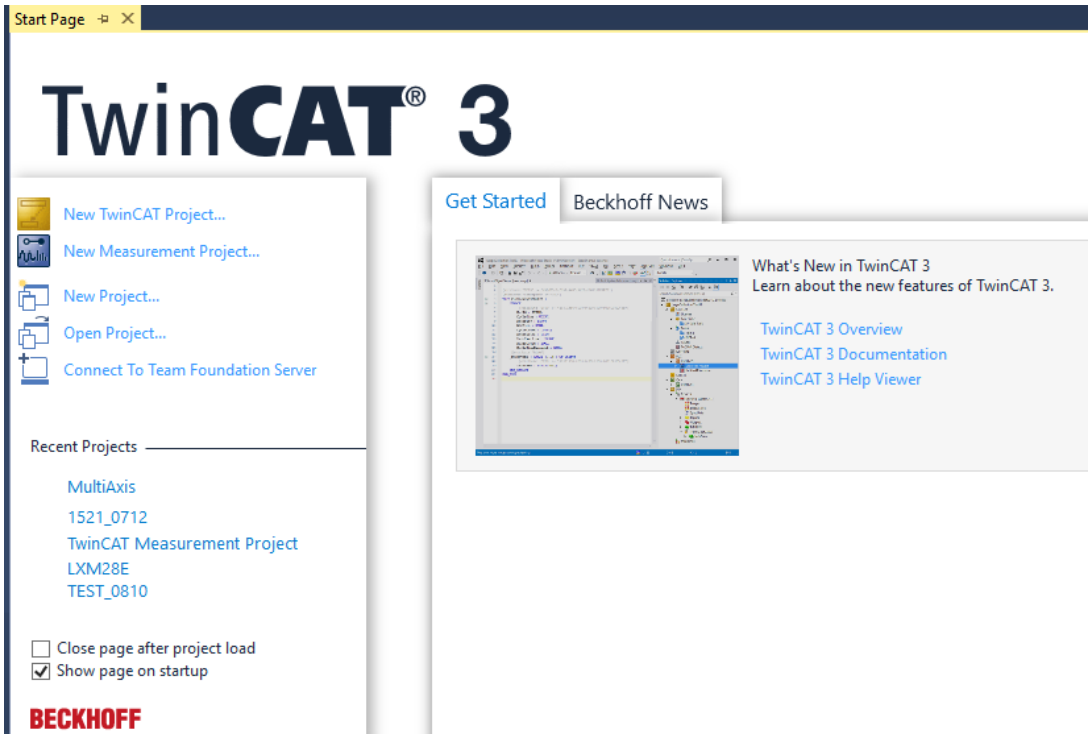

Add the Master

In this example, your computer is used to run TwinCAT and PLC runtime as Master.

To add the master:

Step	Action
1	Click **Choose Target System**. 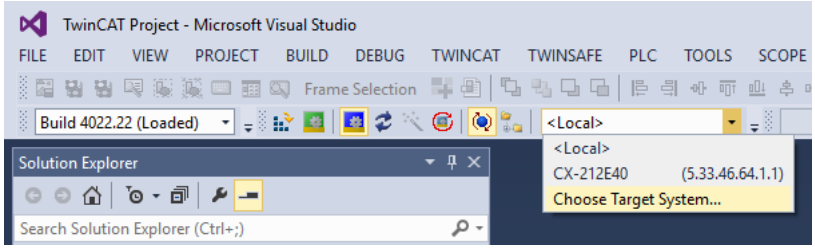
2	In the **Choose Target System** dialog box, select the target and click the **Search (Ethernet)** button. 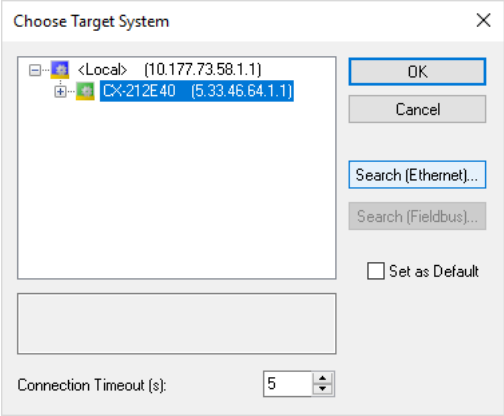
3	In the **Add Route** dialog box, set the EtherCAT masyter IP address or click the **Broadcast Search** button. 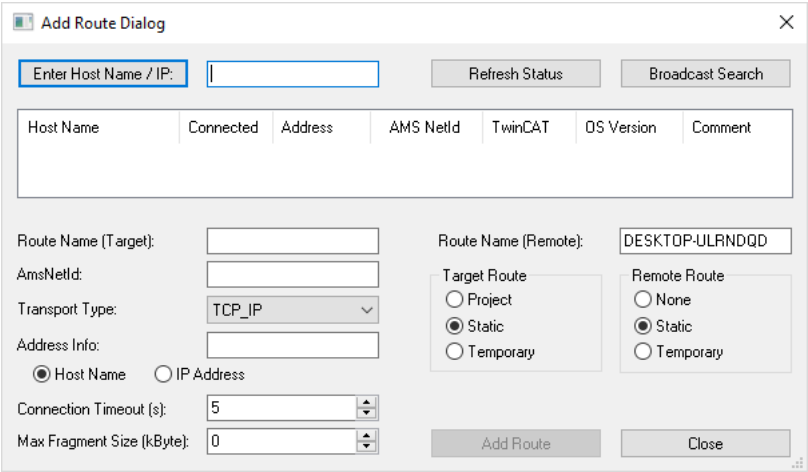
4	Select the adapter, which is the address that you set for the ethernet connection. 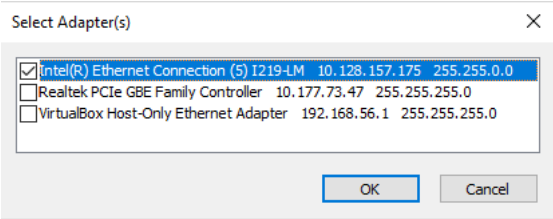

(1) For reasons of security for your installation, change the default password immediately upon use, and consider carefully the implications for giving any access to users.

Step	Action
5	Select the master listed in the **Host name** column and click the **Add Route** button. 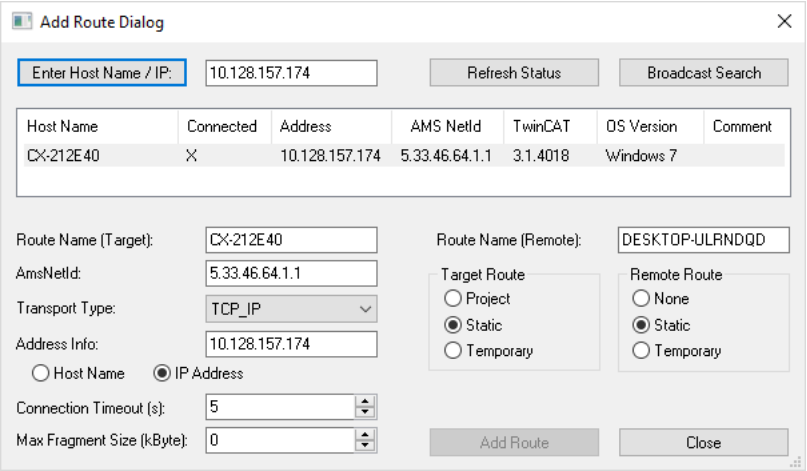
6	Enter Password in the **Logon Information** dialog box. 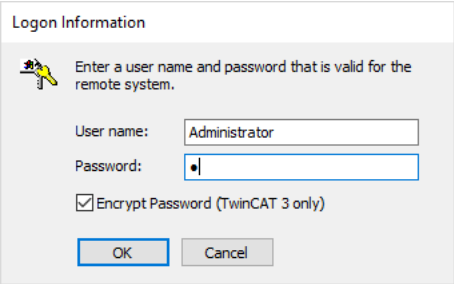 **NOTE:** For Win XP / Win7 default password is **1**, for Win CE default password is empty.(1)
7	The **Connected** column is marked with **X** if the master is successfully added 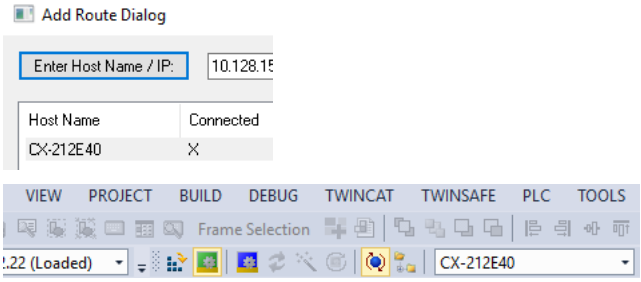

(1) For reasons of security for your installation, change the default password immediately upon use, and consider carefully the implications for giving any access to users.

⚠ WARNING

UNAUTHORIZED DATA ACCESS

- Immediately change any and all default passwords to new, secure passwords.
- Do not distribute passwords to unauthorized or otherwise unqualified personnel.

Failure to follow these instructions can result in death, serious injury, or equipment damage.

NOTE: A secure password is one that has not been shared or distributed to any unauthorized personnel and does not contain any personal or otherwise obvious information. Further, a mix of upper and lower case letters and numbers offer greater security. You should choose a password length of at least seven characters.

Add the Drive

Make sure that the drive is connected to the Ethernet board of your computer.

To add a device:

Step	Action
1	Switch the controller to **Config Mode**. 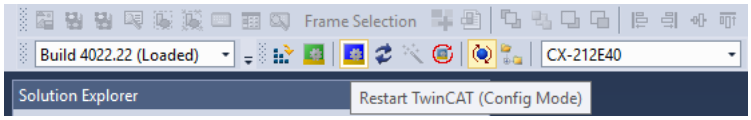
2	Scan the EtherCAT network to add the product in TwinCAT. 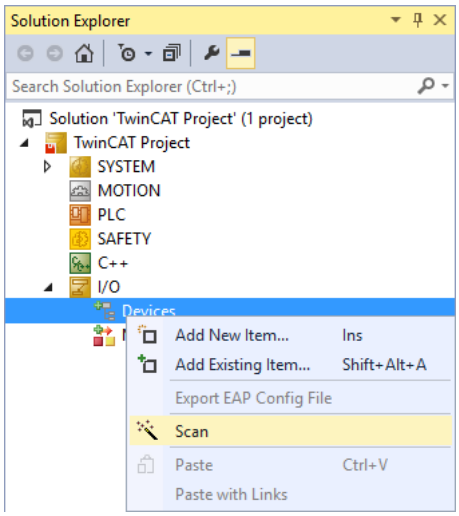
3	The drives with motor logo are displayed in the **I/O** tree view. 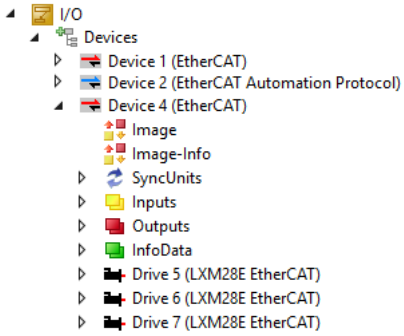

Setting the Process Data

Overview

Four predefined RxPDOs and four predefined TxPDOs are available.

Depending on the selected operating mode, one of the predefined RxPDOs and one of the predefined TxPDOs can be used:

Operating mode	Suitable PDO
Position	First predefined PDO *(see page 399)*
Velocity	Second predefined PDO *(see page 399)*
Torque	Third predefined PDO *(see page 400)*
Any type of switch between: ● Position ● Velocity ● Torque	Fourth predefined PDO *(see page 400)*

Only a single predefined RxPDO and only a single predefined TxPDO can be used simultaneously. The PDOs can be adapted as required.

Up to 10 parameters can be mapped per RxPDO and TxPDO.

First Predefined PDO

The first predefined PDO is suitable for the operating mode Position.

Structure RxPDO1 (1600_h)

Index	Object name
6040_h	Control word
$607A_h$	Target position
$60FE{:}1_h$	Digital outputs

Structure TxPDO1 (1A00h)

Index	Object name
6041_h	Status word
6064_h	Position actual value
$603F_h$	Error code
$60FD_h$	Digital inputs

Second Predefined PDO

The second predefined PDO is suitable for the operating mode Velocity.

Structure RxPDO2 (1601_h)

Index	Object name
6040_h	Control word
$60FF_h$	Target velocity
$60FE{:}1_h$	Digital outputs

Structure TxPDO2 ($1A01_h$)

Index	Object name
6041_h	Status word
6064_h	Position actual value
$603F_h$	Error code
$60FD_h$	Digital inputs

Third Predefined PDO

The third predefined PDO is suitable for the operating mode Torque.

Structure RxPDO3 (1602_h)

Index	Object name
6040_h	Control word
6071_h	Target torque
$60FE{:}1_h$	Digital outputs

Structure TxPDO3 ($1A02_h$)

Index	Object name
6041_h	Status word
6064_h	Position actual value
6077_h	Torque actual value
$603F_h$	Error code
$60FD_h$	Digital inputs

Fourth Predefined PDO

The fourth predefined PDO is suitable for the operating modes Position, Velocity, and Torque. It is possible to switch between the operating modes as required.

Structure RxPDO4 (1603_h)

Index	Object name
6040_h	Control word
6060_h	Mode of operation
$607A_h$	Target position
$60FF_h$	Target velocity
6071_h	Target torque
$60FE{:}1_h$	Digital outputs

Structure TxPDO4 ($1A03_h$)

Index	Object name
6041_h	Status word
6061_h	Mode of operation display
6064_h	Position actual value
$60F4_h$	Following error actual value
6077_h	Torque actual value
$603F_h$	Error code
$60FD_h$	Digital inputs

Glossary

A

absolute movement

A movement to a position defined from a reference point.

ASCII

(*American standard code for Information Interchange*) A protocol for representing alphanumeric characters (letters, numbers, certain graphics, and control characters).

AWG

(*American wire gauge*) The standard that specifies wire section sizes in North America.

B

BOOL

(*boolean*) A basic data type in computing. A `BOOL` variable can have one of these values: 0 (`FALSE`), 1 (`TRUE`). A bit that is extracted from a word is of type `BOOL`; for example, `%MW10.4` is a fifth bit of memory word number 10.

byte

A type that is encoded in an 8-bit format, ranging from 00 hex to FF hex.

C

CANopen

An open industry-standard communication protocol and device profile specification (EN 50325-4).

CiA

(*CAN in automation*) A non-profit group of manufacturers and users dedicated to developing and supporting CAN-based higher layer protocols.

controller

Automates industrial processes (also known as programmable logic controller or programmable controller).

CSA

(*Canadian standards association*) The Canadian standard for industrial electronic equipment in hazardous environments.

D

Degree of Protection

The degree of protection is a standardized specification for electrical equipment that describes the protection against the ingress of foreign objects and water (for example: IP 20).

DIN

(*Deutsches Institut für Normung*) A German institution that sets engineering and dimensional standards.

DOM

Date of manufacturing: The nameplate of the product shows the date of manufacture in the format DD.MM.YY or in the format DD.MM.YYYY. For example: 31.12.11 corresponds to December 31, 2011; 31.12.2011 corresponds to December 31, 2011

DTM

(*device type manager*) Classified into 2 categories:
- Device DTMs connect to the field device configuration components.
- CommDTMs connect to the software communication components.

The DTM provides a unified structure for accessing device parameters and configuring, operating, and diagnosing the devices. DTMs can range from a simple graphical user interface for setting device parameters to a highly sophisticated application capable of performing complex real-time calculations for diagnosis and maintenance purposes.

E

EMC

Electromagnetic compatibility

EMCY

(*emergency*) The object that enables devices to indicate internal errors detected in and by the device. When the devices receive this signal, other network participants can evaluate the received information and start appropriate manufacturer-specific counter actions.

Encoder

Sensor that converts a measured distance or angle into an electrical signal. This signal is evaluated by the drive to determine the actual position of a shaft (rotor) or a driving unit.

Error

Discrepancy between a detected (computed, measured or signaled) value or condition and the specified or theoretically correct value or condition.

ESI

(*EtherCAT Slave Information*) Description file of the EtherCAT slave device, in XML format, to be integrated into the system of the controller.

ESM

(**EtherCAT State Machine**) The communication behavior of any EtherCAT device.

EtherCAT

Ethernet for Control Automation Technology. An Ethernet-based fieldbus system, invented by Beckhoff Automation. The protocol is standardized in IEC 61158 and is suitable for both hard and soft real-time requirements in automation technology.

F

FDT

(*field device tool*) The specification describing the standardized data exchange between the devices and control system or engineering or asset management tools.

firmware

Represents the BIOS, data parameters, and programming instructions that constitute the operating system on a controller. The firmware is stored in non-volatile memory within the controller.

flash memory

A non-volatile memory that can be overwritten. It is stored on a special EEPROM that can be erased and reprogrammed.

H

hex

(*hexadecimal*)

HMI

(*human machine interface*) An operator interface (usually graphical) for human control over industrial equipment.

I

I/O

(*input/output*)

IEC

(*international electrotechnical commission*) A non-profit and non-governmental international standards organization that prepares and publishes international standards for electrical, electronic, and related technologies.

IT Mains

Mains in which all active components are isolated from ground or are grounded by a high impedance. IT: isolé terre (French), isolated ground. Opposite: Grounded mains, see TT/TN mains

L

LED

(*light emitting diode*) An indicator that illuminates under a low-level electrical charge.

Limit Switch

Switches that signal overtravel of the permissible range of travel.

M

Modbus

The protocol that allows communications between many devices connected to the same network.

Monitoring Function

Monitoring functions acquire a value continuously or cyclically (for example, by measuring) in order to check whether it is within permissible limits. Monitoring functions are used for error detection.

ms

(*millisecond*)

N

network

A system of interconnected devices that share a common data path and protocol for communications.

node

An addressable device on a communication network.

non-volatile memory

A memory that can be overwritten. It is stored on a special EEPROM that can be erased and reprogrammed.

P

Parameter

Device data and values that can be read and set (to a certain extent) by the user.

PDO

(*process data object*) An unconfirmed broadcast message or sent from a producer device to a consumer device in an EtherCAT network. The transmit PDO from the producer device has a specific identifier that corresponds to the receive PDO of the consumer devices.

PE

(*Protective Earth*) A common grounding connection to help avoid the hazard of electric shock by keeping any exposed conductive surface of a device at earth potential. To avoid possible voltage drop, no current is allowed to flow in this conductor (also referred to as *protective ground* in North America or as an equipment grounding conductor in the US national electrical code).

PELV

Protective Extra Low Voltage, low voltage with isolation. For more information: IEC 60364-4-41

PLC

(*programmable logic controller*) An industrial computer used to automate manufacturing, industrial, and other electromechanical processes. PLCs are different from common computers in that they are designed to have multiple input and output arrays and adhere to more robust specifications for shock, vibration, temperature, and electrical interference among other things.

Position Deviation

The position deviation is the difference between reference position and actual position. The current position deviation consists of the load-dependent position deviation and the dynamic position deviation.

Power Stage

The power stage controls the motor. The power stage generates current for controlling the motor on the basis of the motion signals from the controller.

PWM

(*pulse width modulation*) A fast output that oscillates between off and on in an adjustable duty cycle, producing a rectangular wave form (though you can adjust it to produce a square wave). The PTO is well adapted to simulate or approximate an analog output in that it regulates the voltage of the output over its period making it useful in light dimming or speed control applications, among others.

Q

Quick Stop

The quick Stop function can be used for fast deceleration of a movement as a response to a detected error or via a command.

R

relative movement

Movement by a specified distance from the current position.

RJ45

A standard type of 8-pin connector for network cables defined for Ethernet.

rms

"Root Mean Square" value of a voltage (Vrms) or a current (Arms)

RPDO

(*receive process data object* An unconfirmed broadcast message or sent from a producer device to a consumer device in an EtherCAT network. The transmit PDO from the producer device has a specific identifier that corresponds to the receive PDO of the consumer devices.

RPM

(*revolutions per minute*)

RSDO

(*receive service data object*) A message received from a producer device to a consumer device in an EtherCAT network.

S

Safety Function

Safety functions are defined in the standard IEC 61800-5-2 (for example, Safe Torque Off (STO), Safe Operating Stop (SOS) or Safe Stop 1 (SS1)). If the safety functions are wired properly, they meet the requirements specified in IEC 61800-5-2.

SDO

(*service data object*) A message used by the field bus master to access (read/write) the object directories of network nodes in an EtherCAT. SDO types include service SDOs (SSDOs) and client SDOs (CSDOs).

STO

(*Safe Torque Off*) The Safety Function STO (IEC 61800-5-2) (“Safe Torque Off”) removes power to the motor thereby relieving the torque applied by the motor. There is no monitoring for standstill..

SYNC

Synchronization Object

T

TN Mains

Grounded mains, differ in terms of the ground connection (PE conductor connection). Opposite: Ungrounded mains, see IT mains.

touchprobe input

Touchprobe inputs are advanced digital inputs. These inputs are used for measuring functions, which accurately detect positions relative to a measure input. Once a touchprobe function has been activated, it runs independently in the system, independent of the IEC program. The IEC program can use parameters to detect the state of the measuring function. This function is supported by hardware and software.

TP

(*touch probe*) A position capture that is triggered by a fast input signal (quick sensor). On the rising edge of the touch probe input, the position of an encoder is captured.

For example, this is used for packaging machines to capture the position of a printmark on a film to cut on the same position.

TPDO

(*transmit process data object*) An unconfirmed broadcast message or sent from a producer device to a consumer device in an EtherCAT network. The transmit PDO from the producer device has a specific identifier that corresponds to the receive PDO of the consumer devices.

TSDO

(*transmit service data object*) A message sent from a producer device to a consumer device in an EtherCAT network.

TT Mains

Grounded mains, differ in terms of the ground connection (PE conductor connection). Opposite: Ungrounded mains, see IT mains.

U

UL

(*underwriters laboratories*) A US organization for product testing and safety certification.

X

XML

Extensible Markup Language Markup language that defines a set of rules for encoding documentsin a format that is both human-readable and machine-readable.

Index

A
access channels, *266*
accessories
    external braking resistors, *123*
    external mains filters, *103*

B
braking resistor
    rating, *120*

C
cable specifications
    protected cable installation, *117*
cables, *104*
comfort tuning, *200*
commissioning software, *190*
common DC bus, *107*
communication objects, *337*
components and interfaces, *53*
control cabinet, *134*

D
DC bus, *107*
degree of protection, *39*
dimensions
    drive, *41*
disposal, *331*, *331*
drive:mounting, *135*

E
easy tuning, *199*
Electrical Installation Drive, *136*
electromagnetic compatibility (EMC), *100*, *101*
EMC, *100*, *101*
    improvement of EMC, *102*
environmental conditions
    drive, *39*
    motor, *58*
equipotential bonding conductors, *102*, *104*

F
Fault Reset, *267*
function
    safety function, *114*
functional safety, *110*
fuses UL, *30*

H
hazard and risk analysis, *109*

I
improvement of EMC, *102*
installation site and connection, *39*
Intended Use, *9*, *10*
internal braking resistor, *122*

M
manual tuning, *205*
monitoring functions, *124*
mounting distances;ventilation, *135*
mounting position, *167*

N
nameplate, *36*, *54*

O
online help, *190*
operating states, *267*
overvoltage category UL, *30*

P
P0-00, *221*
P0-01, *221*
P0-02, *221*
P0-04, *221*
P0-08, *221*
P0-09, *221*
P0-10, *221*
P0-11, *222*
P0-12, *222*
P0-13, *222*
P0-17, *222*
P0-18, *222*
P0-19, *222*
P0-20, *222*
P0-21, *222*
P0-25, *222*
P0-26, *223*
P0-27, *223*
P0-28, *223*
P0-29, *223*
P0-30, *223*
P0-31, *223*
P0-32, *223*
P0-35, *224*
P0-36, *224*
P0-37, *224*
P0-38, *224*
P0-39, *224*
P0-40, *224*
P0-41, *224*
P0-42, *225*
P0-46, *225*
P0-47, *225*
P1-01, *226*
P1-02, *226*
P1-03, *227*
P1-06, *227*

P1-07, *227*
P1-09, *227*
P1-10, *227*
P1-11, *227*
P1-12, *227*
P1-13, *227*
P1-14, *228*
P1-15, *228*
P1-16, *228*
P1-17, *228*
P1-19, *228*
P1-20, *228*
P1-21, *228*
P1-22, *228*
P1-23, *229*
P1-24, *229*
P1-25, *229*
P1-26, *229*
P1-27, *229*
P1-28, *229*
P1-29, *229*
P1-30, *229*
P1-32, *230*
P1-34, *230*
P1-35, *230*
P1-37, *230*
P1-38, *230*
P1-39, *230*
P1-42, *231*
P1-44, *231*
P1-45, *231*
P1-46, *231*
P1-52, *231*
P1-53, *231*
P1-54, *231*
P1-55, *231*
P1-57, *231*
P1-58, *231*
P1-59, *232*
P1-60, *232*
P1-61, *232*
P1-62, *232*
P1-63, *232*
P1-64, *232*
P1-66, *232*
P1-67, *233*
P1-68, *233*
P1-69, *233*
P1-71, *233*
P1-72, *233*
P1-78, *233*
P1-79, *233*
P1-80, *233*
P1-81, *233*
P1-82, *233*
P1-84, *234*
P1-85, *234*
P1-87, *234*
P2-01, *235*
P2-05, *235*
P2-08, *235*
P2-09, *235*
P2-10, *236*
P2-11, *236*
P2-12, *236*
P2-13, *236*
P2-14, *236*
P2-15, *236*
P2-16, *236*
P2-17, *236*
P2-18, *237*
P2-19, *237*
P2-20, *237*
P2-21, *237*
P2-23, *237*
P2-24, *237*
P2-27, *238*
P2-29, *238*
P2-30, *238*
P2-31, *238*
P2-32, *238*
P2-34, *239*
P2-35, *239*
P2-65, *239*
P2-66, *239*
P2-68, *240*
P3-00, *241*
P3-01, *241*
P3-02, *241*
P3-03, *241*
P3-04, *241*
P3-05, *241*
P3-06, *241*
P3-07, *242*
P3-08, *242*
P3-30, *242*
P3-31, *242*
P3-32, *242*
P4-00, *243*
P4-01, *243*
P4-02, *243*
P4-03, *243*
P4-04, *243*
P4-05, *243*
P4-06, *243*
P4-07, *244*
P4-08, *244*
P4-09, *244*
P4-10, *244*
P4-24, *244*
P4-25, *245*
P4-26, *245*
P4-27, *245*
P4-28, *245*
P4-29, *245*
P5-00, *246*
P5-08, *246*
P5-09, *246*
P5-11, *246*
P5-12, *246*
P5-13, *246*
P5-14, *246*
P5-15, *246*
P5-16, *246*
P5-21, *247*
P5-22, *247*
P5-23, *247*
P5-24, *247*
P5-25, *247*
P5-26, *247*

P5-35, *247*
P5-36, *248*
P5-37, *248*
P5-38, *248*
P5-39, *248*
P5-56, *248*
P5-57, *248*
P5-58, *248*
P5-59, *248*
P5-76, *248*
P5-77, *249*
P8-00, *250*
P8-01, *250*
P8-02, *250*
P8-03, *250*
P8-04, *250*
P8-05, *250*
P8-06, *250*
P8-07, *250*
P8-08, *250*
P8-09, *250*
P8-10, *250*
P8-11, *251*
P8-12, *251*
P8-13, *251*
P8-14, *251*
P8-15, *251*
P8-16, *251*
P8-17, *251*
P8-18, *251*
P8-19, *251*
P8-20, *251*
P8-21, *251*
P8-32, *252*
P8-33, *252*
P8-34, *252*
P8-35, *252*
P8-36, *252*
P8-37, *252*
P8-38, *252*
P8-39, *252*
P8-40, *253*
P8-41, *253*
P8-42, *253*
P8-43, *253*
P8-44, *253*
P8-45, *253*
P8-46, *253*
P8-47, *253*
P8-48, *254*
P8-49, *255*
P8-51, *255*
P8-53, *255*
P8-54, *255*
P8-55, *256*
P8-56, *256*
P8-57, *256*
P8-58, *256*
P8-59, *256*
P8-60, *256*
P8-61, *256*
P8-62, *257*
P8-63, *257*
P8-64, *257*
P8-65, *257*
P8-66, *257*
P8-67, *257*
P8-68, *257*
P8-99, *257*
P9-00, *258*
P9-01, *258*
P9-02, *258*
P9-06, *258*
P9-07, *258*
P9-08, *258*
P9-09, *258*
P9-10, *258*
P9-11, *258*
P9-12, *258*
P9-13, *259*
P9-14, *259*
P9-15, *259*
P9-16, *259*
P9-17, *259*
P9-18, *259*
P9-19, *259*
P9-20, *259*
P9-21, *259*
P9-22, *259*
P9-23, *259*
P9-25, *259*
P9-26, *260*
P9-27, *260*
P9-28, *260*
P9-29, *260*
P9-30, *261*, *261*
P9-31, *262*
P9-32, *262*
P9-33, *262*
P9-34, *262*
P9-35, *262*
P9-36, *262*
P9-37, *262*
P9-38, *262*
P9-39, *262*
P9-40, *262*
parallel connection DC bus, *107*
PDO mapping:dynamic, *340*
PDO mapping:structure of entries, *341*
permissible product combinations, *44*
pollution degree, *39*
protected cable installation, *117*
PWM frequency power stage, *43*

Q

Qualification of Personnel, *9*, *9*

R

rating of braking resistor, *120*
Representation of the Parameters, *220*
requirements
    safety function, *115*
resetting error message, *267*

S

safe torque off, *108*

safety function
    function, *114*
    requirements, *115*
safety function STO, *108*
scope of supply, *131*
shipping, *331*
state diagram, *267*
STO, *108*
    function, *114*
    requirements, *115*
storage, *331*

T

tuning the control loops, *198*
type code, *37*, *56*
    drive, *37*
    motor, *56*
type of cooling, *44*

U

UL
    conditions for wiring, *30*
    fuses, *30*
    overvoltage category, *30*

W

wiring UL, *30*